Heating & Air Conditioning
Amana®
AMERICA'S BRAND FOR COMFORT™

ASXN3

Energy-Efficient Split System Air Conditioner Up to 13.4 SEER2 1½ to 5 Tons

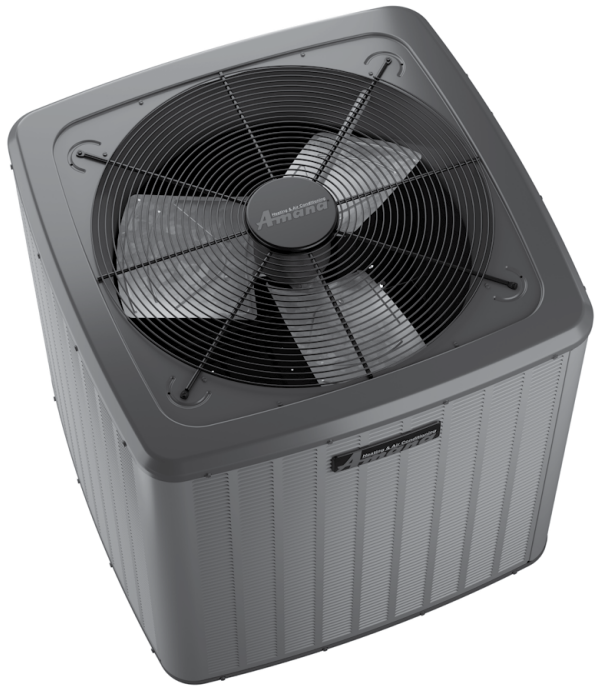

Contents

Nomenclature 2
Product Specifications 3
Expanded Cooling Data 4
Performance Data 18
Wiring Diagram 20
Dimensions 22
Accessories 22

Standard Features

- Energy-efficient compressor
- Copper tube/ enhanced aluminum fin coil- 5mm diameter
- Single-speed PSC condenser fan motor
- Factory-installed filter drier
- Sweat connection service valves with easy access to gauge ports
- Contactor with lug connection
- Ground lug connection
- AHRI Certified; ETL Listed

Cabinet Features

- Removable grille-style top design compliant with UL 60335-2-40
- Venturi for increased velocity of airflow
- Attractive Architectural Gray powder-paint finish with 500-hour salt-spray approval
- Wire fan discharge grille
- Steel louver coil guard
- Top and side maintenance access
- Single-panel access to controls with space provided for field-installed accessories

10 YEAR PARTS LIMITED WARRANTY*

Intertek

COMPANY WITH QUALITY SYSTEM CERTIFIED BY DNV GL = ISO 9001 =

COMPANY WITH ENVIRONMENTAL SYSTEM CERTIFIED BY DNV GL = ISO 14001 =

* Complete warranty details available from your local dealer or at www.amana-hac.com. To receive the 10-Year Parts Limited Warranty, online registration must be completed within 60 days of installation. Online registration is not required in California or Quebec. The duration of warranty coverages in Texas differs in some cases.

Amana® is a registered trademark of Maytag Corporation or its related companies and is used under license. All rights reserved.

A	S	X	N	3	0	36	1	0	A	A
1	2	3	4	5	6	7,8	9		11	12

Brand

A Amana® Brand

Product Category

S Split System R-410A

Unit Type

X Condenser

Z Heat Pump

Feature

N Value

H Enhanced

C Premium

V Ultimate

SEER2

13.4 - 13.7 = 3	16.6 - 17.5 = 7
13.8 - 14.5 = 4	17.6 - 18.5 = 8
14.6 - 15.5 = 5	18.6 - 19.5 = 9
15.6 - 16.5 = 6	19.6 + = 0

Minor Rev

A

Major Rev

A

Variation

Electrical

1 208/230 V, 1 Phase, 60 Hz

Nominal Tonnage

18 - 1½ tons	36 - 3.0 Tons
24 - 2 tons	42 - 3.5 Tons
30 - 2½ tons	48 - 4.0 Tons
	60 - 5.0 Tons

Sales Region

N - North

S - Southeast & North

0 - All Region

	ASXN3 N1810A*	ASXN3 N2410A*	ASXN3 N3010A*	ASXN3 N3610A*	ASXN3 N4210A*	ASXN3 N4810A*	ASXN3 N6010A*
COOLING CAPACITY							
Nominal Cooling (BTU/h)	18,000	24,000	30,000	36,000	42,000	48,000	60,000
Decibels (dBA)	73.0	73.0	76.0	71.0	70.0	74.0	74.0
COMPRESSOR							
RLA	6.1	8.4	12.1	14.1	17.7	18.5	25.6
LRA	35.1	41.2	55	87.4	110.2	124	150
Stage	Single	Single	Single	Single	Single	Single	Single
Type	Rotary	Rotary	Rotary	Scroll	Scroll	Scroll	Scroll
CONDENSER FAN MOTOR							
Motor Type	PSC	PSC	PSC	PSC	PSC	PSC	PSC
Horsepower (RPM)	1/8	1/8	1/6	1/6	1/6	1/4	1/4
FLA	0.70	0.70	0.95	0.95	0.95	1.30	1.30
REFRIGERATION SYSTEM							
Refrigerant Line Size[1]							
Liquid Line Size (“O.D.)	⅜"	⅜"	⅜"	⅜"	⅜"	⅜"	⅜"
Suction Line Size (“O.D.)	¾"	¾"	¾"	⅞"	1⅛"	1⅛"	1⅛"
Refrigerant Connection Size							
Liquid Valve Size (“O.D.)	⅜"	⅜"	⅜"	⅜"	⅜"	⅜"	⅜"
Suction Valve Size (“O.D.) 2,3	¾"	¾"	¾"	¾"	⅞"	⅞"	⅞"
Valve Connection Type	Sweat	Sweat	Sweat	Sweat	Sweat	Sweat	Sweat
Refrigerant Charge4	65	71	78	71	115	120	130
ELECTRICAL DATA							
Voltage-Phase	208/230-1	208/230-1	208/230-1	208/230-1	208/230-1	208/230-1	208/230-1
Minimum Circuit Ampacity 5	8.3	11.2	16.1	18.6	23.1	24.4	33.3
Max. Overcurrent Protection 6	15	15	25	30	40	40	50
Min / Max Volts	197/253	197/253	197/253	197/253	197/253	197/253	197/253
Electrical Conduit Size	½" or ¾"	½" or ¾"	½" or ¾"	½" or ¾"	½" or ¾"	½" or ¾"	½" or ¾"
Equipment Weight (lbs)	117	125	128	153	188	215	227
Ship Weight (lbs)	130	138	143	168	203	235	247

[1] Line sizes denoted for 25’ line sets, tested and rated in accordance with AHRI Standard 210/240. For other line-set lengths or sizes, refer to the installation & Operating instructions and/or the long line-set guidelines.

[2] Wire size should be determined in accordance with National Electrical Codes; extensive wire runs will require larger wire sizes

[3] Must use time-delay fuses or HACR-type circuit breakers of the same size as noted.

[4] Installer will need to supply ¾” to ⅞” adapters for suction line connections.

[5] Installer will need to supply ⅞” to 1⅛” adapters for suction line connections.

[6] Must use time-delay fuses or HACR-type circuit breakers of the same size as noted.

NOTES

- Always check the S&R plate for electrical data on the unit being installed.

Expanded Cooling Data — ASXN3N1810A*/CA*FA2422*6A* + EEP

			Outdoor Ambient Temperature																							
			65				75				85				95				105				115			
			Entering Indoor Wet Bulb Temperature																							
IDB	Airflow		59	63	67	71	59	63	67	71	59	63	67	71	59	63	67	71	59	63	67	71	59	63	67	71
70	550	MBh	17.5	17.8	18.3	-	17.4	17.6	18.1	-	16.9	17.2	17.7	-	16.1	16.4	16.9	-	15.2	15.4	16.0	-	14.3	14.6	15.1	-
		S/T	0.61	0.54	0.41	-	0.61	0.54	0.42	-	0.64	0.57	0.44	-	0.65	0.58	0.46	-	1.00	0.60	0.48	-	1.00	0.65	0.53	-
		ΔT	19	18	14	-	19	17	14	-	20	18	14	-	19	17	14	-	19	17	14	-	20	18	15	-
		kW	1.12	1.12	1.12	-	1.25	1.24	1.24	-	1.38	1.38	1.38	-	1.53	1.53	1.53	-	1.70	1.70	1.70	-	1.89	1.89	1.89	-
		Amps	4.1	4.1	4.1	-	4.7	4.6	4.6	-	5.3	5.3	5.3	-	6.0	6.0	5.9	-	6.7	6.7	6.7	-	7.6	7.6	7.6	-
		Hi PR	235	236	238	-	272	273	275	-	311	312	313	-	352	353	355	-	397	398	400	-	445	446	447	-
		Lo PR	121	122	125	-	128	129	132	-	134	136	139	-	140	141	144	-	145	146	149	-	151	153	156	-
	600	MBh	17.9	18.1	18.6	-	17.7	18.0	18.5	-	17.3	17.5	18.0	-	16.5	16.7	17.2	-	15.5	15.8	16.3	-	14.7	14.9	15.4	-
		S/T	0.64	0.57	0.45	-	0.65	0.58	0.46	-	0.67	0.60	0.48	-	0.69	0.62	0.50	-	1.00	0.64	0.52	-	1.00	0.69	0.56	-
		ΔT	18	16	13	-	18	16	13	-	18	17	13	-	18	16	13	-	18	16	12	-	19	17	14	-
		kW	1.13	1.13	1.13	-	1.25	1.25	1.25	-	1.39	1.39	1.39	-	1.54	1.54	1.54	-	1.71	1.70	1.70	-	1.90	1.90	1.90	-
		Amps	4.1	4.1	4.1	-	4.7	4.7	4.7	-	5.3	5.3	5.3	-	6.0	6.0	6.0	-	6.8	6.7	6.7	-	7.6	7.6	7.6	-
		Hi PR	238	239	240	-	274	275	277	-	313	314	316	-	355	356	357	-	399	400	402	-	447	448	450	-
		Lo PR	123	125	128	-	130	132	135	-	137	138	141	-	142	143	146	-	147	149	152	-	154	155	158	-
	675	MBh	18.3	18.5	19.0	-	18.1	18.4	18.9	-	17.7	17.9	18.4	-	16.9	17.1	17.6	-	15.9	16.2	16.7	-	15.1	15.3	15.8	-
		S/T	0.65	0.58	0.45	-	0.65	0.58	0.46	-	0.68	0.61	0.48	-	1.00	0.62	0.50	-	1.00	0.64	0.52	-	1.00	0.69	0.57	-
		ΔT	17	15	12	-	17	15	12	-	17	16	12	-	17	15	12	-	17	15	11	-	18	16	13	-
		kW	1.13	1.13	1.13	-	1.26	1.26	1.25	-	1.40	1.39	1.39	-	1.54	1.54	1.54	-	1.71	1.71	1.71	-	1.91	1.90	1.90	-
		Amps	4.1	4.1	4.1	-	4.7	4.7	4.7	-	5.3	5.3	5.3	-	6.0	6.0	6.0	-	6.8	6.8	6.8	-	7.7	7.7	7.7	-
		Hi PR	240	241	243	-	277	278	279	-	315	316	318	-	357	358	360	-	402	403	404	-	449	450	452	-
		Lo PR	126	127	130	-	133	134	137	-	139	141	144	-	145	146	149	-	150	151	154	-	156	158	161	-
75	550	MBh	17.5	17.8	18.3	19.1	17.4	17.6	18.1	18.9	16.9	17.2	17.7	18.5	16.1	**16.4**	16.9	17.7	15.2	15.4	16.0	16.7	14.3	14.6	15.1	15.9
		S/T	0.73	0.66	0.53	0.4	0.73	0.66	0.54	0.4	1.00	0.68	0.56	0.4	1.00	**0.70**	0.58	0.4	1.00	0.72	0.60	0.5	1.00	0.77	0.65	0.5
		ΔT	24	22	18	14	24	22	18	14	24	22	18	15	24	**22**	18	14	23	21	18	14	24	23	19	15
		kW	1.12	1.12	1.12	1.1	1.24	1.24	1.24	1.3	1.38	1.38	1.38	1.4	1.53	**1.53**	1.53	1.5	1.70	1.70	1.69	1.7	1.89	1.89	1.89	1.9
		Amps	4.1	4.1	4.1	4.1	4.6	4.6	4.6	4.7	5.3	5.3	5.3	5.3	6.0	**6.0**	5.9	6.0	6.7	6.7	6.7	6.7	7.6	7.6	7.6	7.6
		Hi PR	235	236	238	242.2	272	273	275	279.0	311	312	314	317.6	352	**353**	355	359.1	397	398	400	403.9	445	446	448	451.7
		Lo PR	121	122	125	130.2	128	129	132	137.4	134	136	139	143.8	140	**141**	144	149.1	145	146	149	154.4	151	153	156	161.0
	600	MBh	17.9	18.1	18.6	19.4	17.7	18.0	18.5	19.3	17.3	17.5	18.0	18.8	16.5	16.7	17.3	18.0	15.5	15.8	16.3	17.1	14.7	14.9	15.4	16.2
		S/T	0.76	0.69	0.57	0.4	0.77	0.70	0.57	0.4	1.00	0.72	0.60	0.5	1.00	0.74	0.61	0.5	1.00	0.76	0.63	0.5	1.00	1.00	0.68	0.6
		ΔT	22	21	17	13	22	20	17	13	23	21	17	13	22	20	17	13	22	20	17	13	23	21	18	14
		kW	1.13	1.13	1.13	1.13	1.25	1.25	1.25	1.26	1.39	1.39	1.39	1.40	1.54	1.54	1.53	1.54	1.70	1.70	1.70	1.71	1.90	1.90	1.90	1.91
		Amps	4.1	4.1	4.1	4.1	4.7	4.7	4.7	4.7	5.3	5.3	5.3	5.3	6.0	6.0	6.0	6.0	6.8	6.7	6.7	6.8	7.6	7.6	7.6	7.7
		Hi PR	238	239	240	244.6	275	276	277	281.4	313	314	316	319.9	355	356	357	361.5	400	401	402	406.2	447	448	450	454.0
		Lo PR	123	125	128	132.6	130	132	135	139.9	137	138	141	146.2	142	143	146	151.5	147	149	152	156.8	154	155	158	163.4
	675	MBh	18.3	18.5	19.0	19.8	18.1	18.4	18.9	19.7	17.7	17.9	18.4	19.2	16.9	17.1	17.7	18.4	15.9	16.2	16.7	17.5	15.1	15.3	15.8	16.6
		S/T	0.77	0.70	0.57	0.4	0.77	0.70	0.58	0.4	1.00	0.72	0.60	0.5	1.00	0.74	0.62	0.5	1.00	0.76	0.64	0.5	1.00	1.00	0.69	0.6
		ΔT	21	20	16	12	21	19	16	12	22	20	16	13	21	19	16	12	21	19	16	12	22	20	17	13
		kW	1.13	1.13	1.13	1.1	1.26	1.26	1.25	1.3	1.39	1.39	1.39	1.4	1.54	1.54	1.54	1.5	1.71	1.71	1.71	1.7	1.90	1.90	1.90	1.9
		Amps	4.1	4.1	4.1	4.2	4.7	4.7	4.7	4.7	5.3	5.3	5.3	5.4	6.0	6.0	6.0	6.0	6.8	6.8	6.8	6.8	7.7	7.7	7.7	7.7
		Hi PR	240	241	243	246.9	277	278	280	283.7	316	317	318	322.3	357	358	360	363.8	402	403	404	408.6	450	451	452	456.3
		Lo PR	126	127	130	135.3	133	134	137	142.5	139	141	144	148.8	145	146	149	154.2	150	151	154	159.5	156	158	161	166.0

IDB: Entering Indoor Dry Bulb Temperature

Shaded area reflects ACCA (TVA) conditions

kW = Total system power

High and low pressures are measured at the liquid and suction service valves.

Amps = outdoor unit amps (comp.+fan)

Expanded Cooling Data — ASXN3N1810A*/CA*FA2422*6A* + EEP (cont.)

			Outdoor Ambient Temperature																							
			65				75				85				95				105				115			
			Entering Indoor Wet Bulb Temperature																							
IDB	Airflow		59	63	67	71	59	63	67	71	59	63	67	71	59	63	67	71	59	63	67	71	59	63	67	71
80	550	MBh	17.6	17.9	18.4	19.2	17.5	17.7	18.2	19.0	17.0	17.3	17.8	18.6	16.2	16.5	**17.0**	17.8	15.3	15.5	16.1	16.8	14.4	14.7	15.2	16.0
		S/T	0.84	0.77	0.65	0.5	1.00	0.78	0.65	0.5	1.00	0.80	0.67	0.5	1.00	0.82	**0.69**	0.6	1.00	1.00	0.71	0.6	1.00	1.00	0.76	0.6
		ΔT	28	26	22	19	28	26	22	19	28	26	23	19	28	26	**22**	19	27	26	22	18	29	27	23	20
		kW	1.12	1.12	1.12	1.1	1.25	1.24	1.24	1.3	1.38	1.38	1.38	1.4	1.53	1.53	**1.53**	1.5	1.70	1.70	1.70	1.7	1.89	1.89	1.89	1.9
		Amps	4.1	4.1	4.1	4.1	4.7	4.6	4.6	4.7	5.3	5.3	5.3	5.3	6.0	6.0	**5.9**	6.0	6.7	6.7	6.7	6.8	7.6	7.6	7.6	7.6
		Hi PR	236	237	239	242.6	273	274	275	279.4	311	312	314	318.0	353	354	**355**	359.5	398	399	400	404.3	445	446	448	452.1
		Lo PR	121	123	126	130.7	128	130	133	138.0	135	136	139	144.3	140	142	**145**	149.7	145	147	150	154.9	152	153	156	161.5
	600	MBh	18.0	18.2	18.7	19.5	17.8	18.1	18.6	19.4	17.4	17.6	18.1	18.9	16.6	16.8	17.3	18.1	15.6	15.9	16.4	17.2	14.8	15.0	15.5	16.3
		S/T	1.00	0.81	0.68	0.6	1.00	0.81	0.69	0.6	1.00	0.83	0.71	0.6	1.00	0.85	0.73	0.6	1.00	1.00	0.75	0.6	1.00	1.00	0.79	0.7
		ΔT	27	25	21	17	27	25	21	17	27	25	21	18	27	25	21	17	26	24	21	17	27	26	22	18
		kW	1.13	1.13	1.13	1.14	1.25	1.25	1.25	1.26	1.39	1.39	1.39	1.40	1.54	1.54	1.54	1.54	1.70	1.70	1.70	1.71	1.90	1.90	1.90	1.91
		Amps	4.1	4.1	4.1	4.1	4.7	4.7	4.7	4.7	5.3	5.3	5.3	5.3	6.0	6.0	6.0	6.0	6.8	6.7	6.7	6.8	7.6	7.6	7.6	7.7
		Hi PR	238	239	241	245.0	275	276	278	281.8	314	315	316	320.4	355	356	358	361.9	400	401	403	406.7	448	449	450	454.5
		Lo PR	124	125	128	133.2	131	132	135	140.4	137	139	142	146.7	143	144	147	152.1	148	149	152	157.3	154	156	159	163.9
	675	MBh	18.4	18.6	19.1	19.9	18.2	18.5	19.0	19.8	17.8	18.0	18.5	19.3	17.0	17.2	17.7	18.5	16.0	16.3	16.8	17.6	15.2	15.4	15.9	16.7
		S/T	1.00	0.81	0.69	0.6	1.00	0.82	0.69	0.6	1.00	0.84	0.72	0.6	1.00	1.00	0.73	0.6	1.00	1.00	0.75	0.6	1.00	1.00	0.80	0.7
		ΔT	26	24	20	17	26	24	20	16	26	24	20	17	26	24	20	16	25	23	20	16	27	25	21	17
		kW	1.13	1.13	1.13	1.1	1.26	1.26	1.25	1.3	1.39	1.39	1.39	1.4	1.54	1.54	1.54	1.6	1.71	1.71	1.71	1.7	1.91	1.90	1.90	1.9
		Amps	4.1	4.1	4.1	4.2	4.7	4.7	4.7	4.7	5.3	5.3	5.3	5.4	6.0	6.0	6.0	6.0	6.8	6.8	6.8	6.8	7.7	7.7	7.7	7.7
		Hi PR	241	242	243	247.3	277	278	280	284.1	316	317	319	322.7	357	359	360	364.2	402	403	405	409.0	450	451	453	456.8
		Lo PR	126	128	131	135.8	133	135	138	143.0	140	141	144	149.4	145	147	150	154.7	150	152	155	160.0	157	158	162	166.6
85	550	MBh	17.9	18.2	18.7	19.5	17.8	18.0	18.5	19.3	17.3	17.6	18.1	18.9	16.5	16.8	17.3	18.1	15.6	15.8	16.3	17.1	14.7	15.0	15.5	16.3
		S/T	1.00	0.86	0.74	0.6	1.00	0.87	0.74	0.6	1.00	1.00	0.77	0.6	1.00	1.00	0.79	0.7	1.00	1.00	0.81	0.7	1.00	1.00	0.85	0.7
		ΔT	32	30	26	22	31	30	26	22	32	30	26	23	31	30	26	22	31	29	26	22	32	30	27	23
		kW	1.12	1.12	1.12	1.1	1.25	1.25	1.24	1.3	1.39	1.38	1.38	1.4	1.53	1.53	1.53	1.5	1.70	1.70	1.70	1.7	1.90	1.89	1.89	1.9
		Amps	4.1	4.1	4.1	4.1	4.7	4.7	4.6	4.7	5.3	5.3	5.3	5.3	6.0	6.0	6.0	6.0	6.7	6.7	6.7	6.8	7.6	7.6	7.6	7.7
		Hi PR	237	238	240	243.7	274	275	276	280.5	312	313	315	319.1	354	355	357	360.6	399	400	401	405.4	446	447	449	453.2
		Lo PR	123	124	127	132.5	130	132	135	139.7	137	138	141	146.1	142	143	146	151.4	147	149	152	156.7	154	155	158	163.3
	600	MBh	18.3	18.5	19.0	19.8	18.1	18.3	18.9	19.7	17.7	17.9	18.4	19.2	16.9	17.1	17.6	18.4	15.9	16.2	16.7	17.5	15.1	15.3	15.8	16.6
		S/T	1.00	0.90	0.77	0.6	1.00	0.90	0.78	0.6	1.00	1.00	0.80	0.7	1.00	1.00	0.82	0.7	1.00	1.00	0.84	0.7	1.00	1.00	1.00	0.8
		ΔT	30	28	25	21	30	28	25	21	31	29	25	21	30	28	25	21	30	28	25	21	31	29	26	22
		kW	1.13	1.13	1.13	1.14	1.25	1.25	1.25	1.26	1.39	1.39	1.39	1.40	1.54	1.54	1.54	1.55	1.71	1.71	1.70	1.71	1.90	1.90	1.90	1.91
		Amps	4.1	4.1	4.1	4.2	4.7	4.7	4.7	4.7	5.3	5.3	5.3	5.4	6.0	6.0	6.0	6.0	6.8	6.8	6.7	6.8	7.7	7.7	7.6	7.7
		Hi PR	239	240	242	246.1	276	277	279	282.9	315	316	317	321.5	356	357	359	363.0	401	402	404	407.8	449	450	451	455.6
		Lo PR	125	127	130	134.9	133	134	137	142.2	139	140	143	148.5	144	146	149	153.9	150	151	154	159.1	156	158	161	165.7
	675	MBh	18.7	18.9	19.4	20.2	18.5	18.7	19.3	20.1	18.1	18.3	18.8	19.6	17.3	17.5	18.0	18.8	16.3	16.6	17.1	17.9	15.5	15.7	16.2	17.0
		S/T	1.00	0.90	0.78	0.6	1.00	1.00	0.78	0.7	1.00	1.00	0.81	0.7	1.00	1.00	0.83	0.7	1.00	1.00	0.85	0.7	1.00	1.00	1.00	0.8
		ΔT	29	27	24	20	29	27	24	20	30	28	24	20	29	27	24	20	29	27	24	20	30	28	25	21
		kW	1.14	1.14	1.13	1.1	1.26	1.26	1.26	1.3	1.40	1.40	1.39	1.4	1.55	1.55	1.54	1.6	1.71	1.71	1.71	1.7	1.91	1.91	1.90	1.9
		Amps	4.2	4.1	4.1	4.2	4.7	4.7	4.7	4.7	5.3	5.3	5.3	5.4	6.0	6.0	6.0	6.1	6.8	6.8	6.8	6.8	7.7	7.7	7.7	7.7
		Hi PR	242	243	244	248.4	278	280	281	285.2	317	318	320	323.8	359	360	361	365.3	403	404	406	410.1	451	452	454	457.9
		Lo PR	128	129	133	137.6	135	137	140	144.8	142	143	146	151.2	147	148	151	156.5	152	154	157	161.8	159	160	163	168.3

IDB: Entering Indoor Dry Bulb Temperature

Shaded area reflects AHRI conditions

kW = Total system power

High and low pressures are measured at the liquid and suction service valves.

Amps = outdoor unit amps (comp.+fan)

Expanded Cooling Data — ASXN3N2410A*/CA*TA2422*4A* + EEP

			Outdoor Ambient Temperature																							
			65				75				85				95				105				115			
			Entering Indoor Wet Bulb Temperature																							
IDB	Airflow		59	63	67	71	59	63	67	71	59	63	67	71	59	63	67	71	59	63	67	71	59	63	67	71
70	750	MBh	23.0	23.3	24.0	-	22.8	23.1	23.8	-	22.2	22.5	23.2	-	21.2	21.5	22.2	-	19.9	20.2	20.9	-	18.7	19.1	19.8	-
		S/T	0.56	0.49	0.36	-	0.56	0.49	0.37	-	0.59	0.52	0.39	-	0.61	0.54	0.41	-	1.00	0.56	0.43	-	1.00	0.60	0.48	-
		ΔT	19	17	14	-	19	17	14	-	19	18	14	-	19	17	14	-	19	17	14	-	20	18	15	-
		kW	1.49	1.49	1.49	-	1.65	1.65	1.65	-	1.83	1.83	1.83	-	2.03	2.03	2.02	-	2.25	2.25	2.24	-	2.50	2.50	2.50	-
		Amps	5.1	5.1	5.1	-	5.9	5.9	5.9	-	6.7	6.7	6.7	-	7.6	7.6	7.6	-	8.6	8.6	8.6	-	9.8	9.8	9.8	-
		Hi PR	255	256	258	-	295	296	298	-	337	339	340	-	383	384	386	-	432	433	435	-	484	485	487	-
		Lo PR	123	125	128	-	131	132	135	-	137	139	142	-	143	144	147	-	148	150	153	-	155	157	160	-
	800	MBh	23.3	23.6	24.3	-	23.1	23.4	24.1	-	22.5	22.8	23.5	-	21.5	21.8	22.5	-	20.2	20.5	21.2	-	19.0	19.4	20.1	-
		S/T	0.61	0.54	0.42	-	0.62	0.55	0.42	-	0.64	0.57	0.45	-	1.00	0.59	0.47	-	1.00	0.61	0.49	-	1.00	0.66	0.53	-
		ΔT	18	16	13	-	18	16	13	-	18	17	13	-	18	16	13	-	18	16	13	-	19	17	14	-
		kW	1.50	1.50	1.50	-	1.66	1.66	1.66	-	1.84	1.84	1.84	-	2.04	2.04	2.03	-	2.25	2.25	2.25	-	2.51	2.51	2.51	-
		Amps	5.2	5.2	5.2	-	5.9	5.9	5.9	-	6.8	6.7	6.7	-	7.6	7.6	7.6	-	8.6	8.6	8.6	-	9.8	9.8	9.8	-
		Hi PR	257	258	260	-	297	299	300	-	340	341	343	-	385	386	388	-	434	435	437	-	486	487	489	-
		Lo PR	125	127	130	-	133	134	137	-	139	141	144	-	145	146	149	-	150	152	155	-	157	158	162	-
	900	MBh	23.7	24.0	24.7	-	23.5	23.8	24.5	-	22.9	23.2	23.9	-	21.8	22.1	22.8	-	20.6	20.9	21.6	-	19.4	19.7	20.4	-
		S/T	0.65	0.58	0.45	-	0.65	0.58	0.46	-	0.67	0.60	0.48	-	1.00	0.62	0.50	-	1.00	0.64	0.52	-	1.00	0.69	0.56	-
		ΔT	17	15	12	-	17	15	12	-	17	16	12	-	17	15	12	-	17	15	12	-	18	16	13	-
		kW	1.51	1.51	1.50	-	1.67	1.67	1.66	-	1.85	1.85	1.84	-	2.04	2.04	2.04	-	2.26	2.26	2.26	-	2.52	2.52	2.51	-
		Amps	5.2	5.2	5.2	-	6.0	6.0	5.9	-	6.8	6.8	6.8	-	7.7	7.7	7.7	-	8.7	8.7	8.7	-	9.8	9.8	9.8	-
		Hi PR	259	260	262	-	300	301	302	-	342	343	345	-	387	388	390	-	436	437	439	-	488	489	491	-
		Lo PR	127	129	132	-	135	136	139	-	141	143	146	-	147	148	151	-	152	154	157	-	159	160	164	-
75	750	MBh	23.0	23.3	24.0	25.1	22.8	23.1	23.8	24.9	22.2	22.5	23.2	24.3	21.2	21.5	22.2	23.2	19.9	20.2	20.9	22.0	18.8	19.1	19.8	20.8
		S/T	0.68	0.61	0.48	0.4	0.68	0.61	0.49	0.4	1.00	0.64	0.51	0.4	1.00	0.65	0.53	0.4	1.00	0.67	0.55	0.4	1.00	1.00	0.60	0.5
		ΔT	23	21	18	15	23	21	18	15	23	22	18	15	23	21	18	15	23	21	18	14	24	22	19	15
		kW	1.49	1.49	1.49	1.5	1.65	1.65	1.65	1.7	1.83	1.83	1.83	1.8	2.03	2.03	2.02	2.0	2.25	2.24	2.24	2.3	2.50	2.50	2.50	2.5
		Amps	5.1	5.1	5.1	5.2	5.9	5.9	5.9	5.9	6.7	6.7	6.7	6.7	7.6	7.6	7.6	7.6	8.6	8.6	8.6	8.6	9.8	9.8	9.8	9.8
		Hi PR	255	256	258	262.6	296	297	298	302.9	338	339	341	345.0	383	384	386	390.4	432	433	435	439.4	484	485	487	491.6
		Lo PR	123	125	128	133.2	131	132	135	140.6	137	139	142	147.2	143	144	148	152.8	148	150	153	158.2	155	157	160	165.0
	800	MBh	23.3	23.6	24.3	25.4	23.1	23.4	24.1	25.2	22.5	22.8	23.5	24.6	21.5	**21.8**	22.5	23.5	20.2	20.5	21.2	22.3	19.1	19.4	20.1	21.1
		S/T	0.73	0.66	0.54	0.4	0.74	0.67	0.54	0.4	1.00	0.69	0.57	0.4	1.00	**0.71**	0.58	0.5	1.00	0.73	0.60	0.5	1.00	1.00	0.65	0.5
		ΔT	22	20	17	14	22	20	17	13	22	20	17	14	22	**20**	17	13	22	20	17	13	23	21	18	14
		kW	1.50	1.50	1.49	1.51	1.66	1.66	1.66	1.67	1.84	1.84	1.84	1.85	2.04	**2.03**	2.03	2.04	2.25	2.25	2.25	2.26	2.51	2.51	2.51	2.52
		Amps	5.2	5.2	5.2	5.2	5.9	5.9	5.9	6.0	6.7	6.7	6.7	6.8	7.6	**7.6**	7.6	7.7	8.6	8.6	8.6	8.7	9.8	9.8	9.8	9.8
		Hi PR	257	259	260	264.8	298	299	301	305.0	340	341	343	347.2	385	**386**	388	392.6	434	435	437	441.6	486	488	489	493.8
		Lo PR	125	127	130	135.0	133	134	137	142.5	139	141	144	149.0	145	**146**	149	154.6	150	152	155	160.0	157	158	162	166.8
	900	MBh	23.7	24.0	24.7	25.7	23.5	23.8	24.5	25.5	22.9	23.2	23.9	24.9	21.8	22.2	22.8	23.9	20.6	20.9	21.6	22.6	19.4	19.7	20.4	21.5
		S/T	0.76	0.69	0.57	0.4	1.00	0.70	0.57	0.4	1.00	0.72	0.60	0.5	1.00	0.74	0.62	0.5	1.00	0.76	0.64	0.5	1.00	1.00	0.68	0.6
		ΔT	21	19	16	13	21	19	16	13	21	20	16	13	21	19	16	13	21	19	16	12	22	20	17	13
		kW	1.51	1.50	1.50	1.5	1.67	1.67	1.66	1.7	1.85	1.85	1.84	1.9	2.04	2.04	2.04	2.1	2.26	2.26	2.26	2.3	2.52	2.52	2.51	2.5
		Amps	5.2	5.2	5.2	5.3	6.0	5.9	5.9	6.0	6.8	6.8	6.8	6.8	7.7	7.7	7.7	7.7	8.7	8.7	8.7	8.7	9.8	9.8	9.8	9.9
		Hi PR	260	261	262	266.9	300	301	303	307.1	342	343	345	349.3	387	388	390	394.7	436	437	439	443.7	489	490	491	495.9
		Lo PR	127	129	132	137.0	135	136	139	144.5	141	143	146	151.0	147	148	151	156.6	152	154	157	162.0	159	160	164	168.9

IDB: Entering Indoor Dry Bulb Temperature

Shaded area reflects ACCA (TVA) conditions

kW = Total system power

High and low pressures are measured at the liquid and suction service valves.

Amps = outdoor unit amps (comp.+fan)

Expanded Cooling Data — ASXN3N2410A*/CA*TA2422*4A* + EEP (cont.)

			Outdoor Ambient Temperature																							
			65				75				85				95				105				115			
			Entering Indoor Wet Bulb Temperature																							
IDB	Airflow		59	63	67	71	59	63	67	71	59	63	67	71	59	63	67	71	59	63	67	71	59	63	67	71
80	750	MBh	23.1	23.5	24.1	25.2	22.9	23.2	23.9	25.0	22.3	22.6	23.3	24.4	21.3	21.6	22.3	23.3	20.0	20.3	21.0	22.1	18.9	19.2	19.9	20.9
		S/T	1.00	0.72	0.60	0.5	1.00	0.73	0.60	0.5	1.00	0.75	0.63	0.5	1.00	0.77	0.64	0.5	1.00	1.00	0.67	0.5	1.00	1.00	0.71	0.6
		ΔT	27	25	22	19	27	25	22	18	27	25	22	19	27	25	22	18	27	25	22	18	28	26	23	19
		kW	1.49	1.49	1.49	1.5	1.65	1.65	1.65	1.7	1.83	1.83	1.83	1.8	2.03	2.03	2.02	2.0	2.25	2.25	2.24	2.3	2.50	2.50	2.50	2.5
		Amps	5.1	5.1	5.1	5.2	5.9	5.9	5.9	5.9	6.7	6.7	6.7	6.7	7.6	7.6	7.6	7.6	8.6	8.6	8.6	8.6	9.8	9.8	9.8	9.8
		Hi PR	256	257	259	263.1	296	297	299	303.3	338	339	341	345.5	384	385	386	390.9	433	434	435	439.9	485	486	488	492.1
		Lo PR	124	125	128	133.7	131	133	136	141.2	138	139	143	147.8	143	145	148	153.3	149	150	154	158.8	156	157	160	165.6
	800	MBh	23.4	23.8	24.4	25.5	23.2	23.5	24.2	25.3	22.6	22.9	23.6	24.7	21.6	21.9	**22.6**	23.6	20.3	20.7	21.3	22.4	19.2	19.5	20.2	21.2
		S/T	1.00	0.78	0.65	0.5	1.00	0.78	0.66	0.5	1.00	0.81	0.68	0.6	1.00	1.00	**0.70**	0.6	1.00	1.00	0.72	0.6	1.00	1.00	0.77	0.6
		ΔT	26	24	21	17	26	24	21	17	26	24	21	18	26	24	**21**	17	26	24	21	17	27	25	22	18
		kW	1.50	1.50	1.50	1.51	1.66	1.66	1.66	1.67	1.84	1.84	1.84	1.85	2.04	2.04	**2.03**	2.04	2.25	2.25	2.25	2.26	2.51	2.51	2.51	2.52
		Amps	5.2	5.2	5.2	5.2	5.9	5.9	5.9	6.0	6.7	6.7	6.7	6.8	7.6	7.6	**7.6**	7.7	8.6	8.6	8.6	8.7	9.8	9.8	9.8	9.9
		Hi PR	258	259	261	265.3	298	299	301	305.5	340	341	343	347.7	386	387	**389**	393.1	435	436	438	442.0	487	488	490	494.3
		Lo PR	126	127	130	135.5	133	135	138	143.0	140	141	144	149.6	145	147	**150**	155.1	151	152	155	160.6	157	159	162	167.4
	900	MBh	23.8	24.1	24.8	25.9	23.6	23.9	24.6	25.6	23.0	23.3	24.0	25.0	22.0	22.3	23.0	24.0	20.7	21.0	21.7	22.7	19.5	19.9	20.5	21.6
		S/T	1.00	0.81	0.68	0.6	1.00	0.82	0.69	0.6	1.00	0.84	0.71	0.6	1.00	1.00	0.73	0.6	1.00	1.00	0.75	0.6	1.00	1.00	0.80	0.7
		ΔT	25	23	20	17	25	23	20	16	25	24	20	17	25	23	20	16	25	23	20	16	26	24	21	17
		kW	1.51	1.50	1.50	1.5	1.67	1.67	1.66	1.7	1.85	1.85	1.84	1.9	2.04	2.04	2.04	2.1	2.26	2.26	2.26	2.3	2.52	2.52	2.51	2.5
		Amps	5.2	5.2	5.2	5.3	6.0	6.0	5.9	6.0	6.8	6.8	6.8	6.8	7.7	7.7	7.7	7.7	8.7	8.7	8.7	8.7	9.8	9.8	9.8	9.9
		Hi PR	260	261	263	267.4	300	301	303	307.6	342	344	345	349.8	388	389	391	395.2	437	438	440	444.1	489	490	492	496.4
		Lo PR	128	129	132	137.5	135	137	140	145.0	142	143	146	151.6	147	149	152	157.1	153	154	157	162.6	159	161	164	169.4
85	750	MBh	23.5	23.8	24.5	25.6	23.3	23.6	24.3	25.4	22.7	23.0	23.7	24.8	21.7	22.0	22.7	23.7	20.4	20.7	21.4	22.5	19.3	19.6	20.3	21.3
		S/T	1.00	0.82	0.69	0.6	1.00	0.82	0.70	0.6	1.00	1.00	0.72	0.6	1.00	1.00	0.74	0.6	1.00	1.00	0.76	0.6	1.00	1.00	1.00	0.7
		ΔT	31	29	25	22	30	29	25	22	31	29	26	22	30	29	25	22	30	28	25	22	31	30	26	23
		kW	1.49	1.49	1.49	1.5	1.66	1.65	1.65	1.7	1.84	1.83	1.83	1.8	2.03	2.03	2.03	2.0	2.25	2.25	2.25	2.3	2.51	2.50	2.50	2.5
		Amps	5.2	5.2	5.1	5.2	5.9	5.9	5.9	5.9	6.7	6.7	6.7	6.8	7.6	7.6	7.6	7.7	8.6	8.6	8.6	8.7	9.8	9.8	9.8	9.8
		Hi PR	257	258	260	264.3	297	298	300	304.5	339	340	342	346.7	385	386	388	392.1	434	435	437	441.1	486	487	489	493.3
		Lo PR	126	127	130	135.5	133	135	138	143.0	140	141	144	149.6	145	147	150	155.2	151	152	155	160.6	158	159	162	167.4
	800	MBh	23.8	24.1	24.8	25.9	23.6	23.9	24.6	25.7	23.0	23.3	24.0	25.1	22.0	22.3	23.0	24.0	20.7	21.0	21.7	22.8	19.6	19.9	20.6	21.6
		S/T	1.00	0.87	0.75	0.6	1.00	1.00	0.75	0.6	1.00	1.00	0.78	0.6	1.00	1.00	0.79	0.7	1.00	1.00	0.81	0.7	1.00	1.00	1.00	0.7
		ΔT	29	28	24	21	29	28	24	21	30	28	25	21	29	28	24	21	29	27	24	21	30	29	25	22
		kW	1.50	1.50	1.50	1.51	1.66	1.66	1.66	1.67	1.84	1.84	1.84	1.85	2.04	2.04	2.04	2.05	2.26	2.26	2.25	2.27	2.51	2.51	2.51	2.52
		Amps	5.2	5.2	5.2	5.2	5.9	5.9	5.9	6.0	6.8	6.8	6.7	6.8	7.7	7.7	7.6	7.7	8.7	8.7	8.6	8.7	9.8	9.8	9.8	9.9
		Hi PR	259	260	262	266.5	299	300	302	306.7	342	343	344	348.9	387	388	390	394.3	436	437	439	443.2	488	489	491	495.5
		Lo PR	127	129	132	137.4	135	136	140	144.9	142	143	146	151.4	147	149	152	157.0	153	154	157	162.4	159	161	164	169.2
	900	MBh	24.2	24.5	25.2	26.2	24.0	24.3	25.0	26.0	23.4	23.7	24.4	25.4	22.3	22.7	23.4	24.4	21.1	21.4	22.1	23.1	19.9	20.2	20.9	22.0
		S/T	1.00	0.90	0.78	0.6	1.00	1.00	0.78	0.7	1.00	1.00	0.81	0.7	1.00	1.00	0.82	0.7	1.00	1.00	1.00	0.7	1.00	1.00	1.00	0.8
		ΔT	29	27	23	20	29	27	23	20	29	27	24	20	29	27	23	20	28	26	23	20	29	28	24	21
		kW	1.51	1.51	1.51	1.5	1.67	1.67	1.67	1.7	1.85	1.85	1.85	1.9	2.05	2.05	2.04	2.1	2.26	2.26	2.26	2.3	2.52	2.52	2.52	2.5
		Amps	5.2	5.2	5.2	5.3	6.0	6.0	6.0	6.0	6.8	6.8	6.8	6.8	7.7	7.7	7.7	7.7	8.7	8.7	8.7	8.7	9.9	9.9	9.8	9.9
		Hi PR	261	262	264	268.6	301	303	304	308.8	344	345	347	351.0	389	390	392	396.4	438	439	441	445.3	490	491	493	497.6
		Lo PR	129	131	134	139.4	137	138	142	146.9	144	145	148	153.4	149	151	154	159.0	155	156	159	164.4	161	163	166	171.2

IDB: Entering Indoor Dry Bulb Temperature

Shaded area reflects AHRI conditions

kW = Total system power

High and low pressures are measured at the liquid and suction service valves.

Amps = outdoor unit amps (comp.+fan)

			Outdoor Ambient Temperature																							
			65				75				85				95				105				115			
			Entering Indoor Wet Bulb Temperature																							
IDB	Airflow		59	63	67	71	59	63	67	71	59	63	67	71	59	63	67	71	59	63	67	71	59	63	67	71
70	900	MBh	28.7	29.1	29.9	-	28.4	28.8	29.7	-	27.7	28.1	28.9	-	26.4	26.8	27.6	-	24.8	25.2	26.0	-	23.3	23.7	24.6	-
		S/T	0.54	0.46	0.33	-	0.54	0.47	0.33	-	0.57	0.49	0.36	-	0.58	0.51	0.38	-	1.00	0.53	0.40	-	1.00	0.58	0.45	-
		ΔT	20	19	15	-	20	18	15	-	21	19	15	-	20	18	15	-	20	18	15	-	21	19	16	-
		kW	1.89	1.88	1.88	-	2.10	2.09	2.09	-	2.33	2.33	2.33	-	2.59	2.59	2.58	-	2.87	2.87	2.87	-	3.21	3.20	3.20	-
		Amps	6.6	6.6	6.6	-	7.6	7.6	7.5	-	8.6	8.6	8.6	-	9.8	9.8	9.8	-	11.1	11.1	11.1	-	12.6	12.6	12.6	-
		Hi PR	253	255	256	-	294	295	297	-	336	337	339	-	381	382	384	-	430	431	433	-	482	484	485	-
		Lo PR	122	124	127	-	130	131	134	-	136	138	141	-	142	143	146	-	147	149	152	-	154	155	159	-
	1000	MBh	29.0	29.4	30.2	-	28.7	29.1	30.0	-	28.0	28.4	29.2	-	26.7	27.1	27.9	-	25.1	25.5	26.4	-	23.6	24.0	24.9	-
		S/T	0.61	0.53	0.40	-	0.61	0.54	0.41	-	0.64	0.56	0.43	-	1.00	0.58	0.45	-	1.00	0.60	0.47	-	1.00	0.66	0.52	-
		ΔT	19	17	14	-	19	17	14	-	19	18	14	-	19	17	14	-	19	17	14	-	20	18	15	-
		kW	1.90	1.90	1.89	-	2.11	2.11	2.10	-	2.34	2.34	2.34	-	2.60	2.60	2.59	-	2.88	2.88	2.88	-	3.22	3.22	3.21	-
		Amps	6.7	6.7	6.6	-	7.6	7.6	7.6	-	8.7	8.7	8.7	-	9.9	9.9	9.8	-	11.2	11.2	11.1	-	12.7	12.7	12.7	-
		Hi PR	256	257	258	-	296	297	299	-	338	339	341	-	383	385	386	-	432	433	435	-	485	486	487	-
		Lo PR	124	125	128	-	131	133	136	-	138	139	142	-	143	145	148	-	149	150	153	-	156	157	160	-
	1125	MBh	29.3	29.7	30.5	-	29.0	29.4	30.3	-	28.3	28.7	29.5	-	27.0	27.4	28.2	-	25.4	25.8	26.6	-	23.9	24.3	25.2	-
		S/T	0.65	0.58	0.44	-	0.66	0.58	0.45	-	0.68	0.61	0.47	-	1.00	0.63	0.49	-	1.00	0.65	0.51	-	1.00	0.70	0.56	-
		ΔT	18	17	13	-	18	17	13	-	19	17	13	-	18	16	13	-	18	16	13	-	19	17	14	-
		kW	1.91	1.90	1.90	-	2.12	2.11	2.11	-	2.35	2.35	2.35	-	2.61	2.60	2.60	-	2.89	2.89	2.89	-	3.23	3.22	3.22	-
		Amps	6.7	6.7	6.7	-	7.7	7.7	7.6	-	8.7	8.7	8.7	-	9.9	9.9	9.9	-	11.2	11.2	11.2	-	12.7	12.7	12.7	-
		Hi PR	257	258	260	-	297	299	300	-	340	341	343	-	385	386	388	-	434	435	437	-	486	487	489	-
		Lo PR	125	127	130	-	133	134	137	-	139	141	144	-	145	146	149	-	150	152	155	-	157	158	162	-
75	900	MBh	28.7	29.1	30.0	31.3	28.4	28.8	29.7	31.0	27.7	28.1	28.9	30.3	26.4	26.8	27.7	29.0	24.8	25.2	26.1	27.4	23.3	23.8	24.6	25.9
		S/T	0.66	0.59	0.45	0.3	0.67	0.59	0.46	0.3	1.00	0.62	0.49	0.3	1.00	0.64	0.50	0.4	1.00	0.66	0.53	0.4	1.00	1.00	0.58	0.4
		ΔT	24	22	19	16	24	22	19	16	24	23	19	16	24	22	19	16	24	22	19	15	25	23	20	16
		kW	1.88	1.88	1.88	1.9	2.10	2.09	2.09	2.1	2.33	2.33	2.33	2.3	2.59	2.58	2.58	2.6	2.87	2.87	2.86	2.9	3.20	3.20	3.20	3.2
		Amps	6.6	6.6	6.6	6.7	7.6	7.6	7.5	7.6	8.6	8.6	8.6	8.7	9.8	9.8	9.8	9.9	11.1	11.1	11.1	11.2	12.6	12.6	12.6	12.7
		Hi PR	254	255	257	261.1	294	295	297	301.3	336	337	339	343.5	382	383	384	388.9	430	432	433	437.8	483	484	486	490.1
		Lo PR	122	124	127	132.0	130	131	134	139.5	136	138	141	146.1	142	143	146	151.6	147	149	152	157.1	154	155	159	163.9
	1000	MBh	29.0	29.4	30.3	31.6	28.7	29.1	30.0	31.3	28.0	28.4	29.3	30.6	26.7	27.1	28.0	29.3	25.1	25.5	26.4	27.7	23.6	24.1	24.9	26.2
		S/T	0.73	0.66	0.53	0.4	0.74	0.67	0.53	0.4	1.00	0.69	0.56	0.4	1.00	0.71	0.58	0.4	1.00	0.73	0.60	0.5	1.00	1.00	0.65	0.5
		ΔT	23	21	18	14	23	21	18	14	23	22	18	15	23	21	18	14	23	21	18	14	24	22	19	15
		kW	1.90	1.89	1.89	1.91	2.11	2.10	2.10	2.12	2.34	2.34	2.34	2.35	2.60	2.60	2.59	2.61	2.88	2.88	2.88	2.89	3.22	3.21	3.21	3.23
		Amps	6.7	6.6	6.6	6.7	7.6	7.6	7.6	7.7	8.7	8.7	8.7	8.7	9.9	9.9	9.8	9.9	11.2	11.2	11.1	11.2	12.7	12.7	12.7	12.7
		Hi PR	256	257	259	263.2	296	297	299	303.4	338	339	341	345.6	384	385	387	391.0	433	434	435	439.9	485	486	488	492.2
		Lo PR	124	125	128	133.6	131	133	136	141.1	138	139	142	147.6	143	145	148	153.2	149	150	153	158.6	156	157	160	165.5
	1125	MBh	29.3	29.7	30.6	31.9	29.0	29.4	30.3	31.6	28.3	28.7	29.5	30.9	27.0	**27.4**	28.3	29.6	25.4	25.8	26.7	28.0	23.9	24.4	25.2	26.5
		S/T	0.78	0.70	0.57	0.4	0.78	0.71	0.58	0.4	1.00	0.73	0.60	0.5	1.00	**0.75**	0.62	0.5	1.00	0.77	0.64	0.5	1.00	1.00	0.69	0.6
		ΔT	22	21	17	14	22	20	17	14	23	21	17	14	22	**20**	17	14	22	20	17	13	23	21	18	14
		kW	1.90	1.90	1.90	1.9	2.11	2.11	2.11	2.1	2.35	2.35	2.34	2.4	2.61	**2.60**	2.60	2.6	2.89	2.89	2.88	2.9	3.22	3.22	3.22	3.2
		Amps	6.7	6.7	6.7	6.7	7.7	7.6	7.6	7.7	8.7	8.7	8.7	8.8	9.9	**9.9**	9.9	9.9	11.2	11.2	11.2	11.3	12.7	12.7	12.7	12.8
		Hi PR	257	259	260	264.8	298	299	301	305.0	340	341	343	347.2	385	**386**	388	392.6	434	435	437	441.6	486	488	489	493.8
		Lo PR	125	127	130	135.0	133	134	137	142.5	139	141	144	149.0	145	**146**	149	154.6	150	152	155	160.0	157	158	162	166.8

IDB: Entering Indoor Dry Bulb Temperature

Shaded area reflects ACCA (TVA) conditions

kW = Total system power

High and low pressures are measured at the liquid and suction service valves.

Amps = outdoor unit amps (comp.+fan)

Expanded Cooling Data — ASXN3N3010A*/CA*FA3626*6A* + EEP (cont.)

			Outdoor Ambient Temperature																							
			65				75				85				95				105				115			
			Entering Indoor Wet Bulb Temperature																							
IDB	Airflow		59	63	67	71	59	63	67	71	59	63	67	71	59	63	67	71	59	63	67	71	59	63	67	71
80	900	MBh	28.8	29.2	30.1	31.4	28.6	29.0	29.9	31.2	27.8	28.2	29.1	30.4	26.5	26.9	27.8	29.1	24.9	25.4	26.2	27.5	23.5	23.9	24.8	26.1
		S/T	1.00	0.71	0.58	0.4	1.00	0.72	0.58	0.4	1.00	0.74	0.61	0.5	1.00	0.76	0.63	0.5	1.00	1.00	0.65	0.5	1.00	1.00	0.70	0.6
		ΔT	28	26	23	20	28	26	23	20	28	27	23	20	28	26	23	20	28	26	23	19	29	27	24	20
		kW	1.89	1.88	1.88	1.9	2.10	2.09	2.09	2.1	2.33	2.33	2.33	2.3	2.59	2.58	2.58	2.6	2.87	2.87	2.87	2.9	3.21	3.20	3.20	3.2
		Amps	6.6	6.6	6.6	6.7	7.6	7.6	7.5	7.6	8.6	8.6	8.6	8.7	9.8	9.8	9.8	9.9	11.1	11.1	11.1	11.2	12.6	12.6	12.6	12.7
		Hi PR	254	255	257	261.5	294	296	297	301.8	337	338	339	343.9	382	383	385	389.3	431	432	434	438.3	483	484	486	490.5
		Lo PR	123	124	127	132.5	130	132	135	140.0	137	138	141	146.6	142	144	147	152.2	148	149	152	157.6	155	156	159	164.4
	1000	MBh	29.1	29.6	30.4	31.7	28.9	29.3	30.2	31.5	28.1	28.5	29.4	30.7	26.8	27.2	28.1	29.4	25.2	25.7	26.5	27.8	23.8	24.2	25.1	26.4
		S/T	1.00	0.78	0.65	0.5	1.00	0.79	0.66	0.5	1.00	0.81	0.68	0.5	1.00	1.00	0.70	0.6	1.00	1.00	0.72	0.6	1.00	1.00	0.77	0.6
		ΔT	27	25	22	18	27	25	22	18	27	26	22	19	27	25	22	18	27	25	22	18	28	26	23	19
		kW	1.90	1.90	1.89	1.91	2.11	2.11	2.10	2.12	2.34	2.34	2.34	2.35	2.60	2.60	2.59	2.61	2.88	2.88	2.88	2.89	3.22	3.22	3.21	3.23
		Amps	6.7	6.7	6.6	6.7	7.6	7.6	7.6	7.7	8.7	8.7	8.7	8.8	9.9	9.9	9.8	9.9	11.2	11.2	11.1	11.2	12.7	12.7	12.7	12.7
		Hi PR	256	257	259	263.6	297	298	299	303.9	339	340	342	346.0	384	385	387	391.4	433	434	436	440.4	485	486	488	492.6
		Lo PR	124	126	129	134.1	132	133	136	141.6	138	140	143	148.2	144	145	148	153.7	149	151	154	159.2	156	158	161	166.0
	1125	MBh	29.4	29.8	30.7	32.0	29.2	29.6	30.5	31.8	28.4	28.8	29.7	31.0	27.1	27.5	**28.4**	29.7	25.5	26.0	26.8	28.1	24.1	24.5	25.4	26.7
		S/T	1.00	0.82	0.69	0.6	1.00	0.83	0.70	0.6	1.00	0.85	0.72	0.6	1.00	1.00	**0.74**	0.6	1.00	1.00	0.76	0.6	1.00	1.00	0.81	0.7
		ΔT	26	25	21	18	26	24	21	18	27	25	21	18	26	24	**21**	18	26	24	21	17	27	25	22	18
		kW	1.90	1.90	1.90	1.9	2.12	2.11	2.11	2.1	2.35	2.35	2.35	2.4	2.61	2.60	**2.60**	2.6	2.89	2.89	2.89	2.9	3.22	3.22	3.22	3.2
		Amps	6.7	6.7	6.7	6.7	7.7	7.7	7.6	7.7	8.7	8.7	8.7	8.8	9.9	9.9	**9.9**	10.0	11.2	11.2	11.2	11.3	12.7	12.7	12.7	12.8
		Hi PR	258	259	261	265.3	298	299	301	305.5	340	341	343	347.7	386	387	**389**	393.1	435	436	438	442.0	487	488	490	494.3
		Lo PR	126	127	130	135.5	133	135	138	143.0	140	141	144	149.6	145	147	**150**	155.1	151	152	155	160.6	157	159	162	167.4
85	900	MBh	29.3	29.7	30.6	31.9	29.1	29.5	30.3	31.7	28.3	28.7	29.6	30.9	27.0	27.4	28.3	29.6	25.4	25.8	26.7	28.0	24.0	24.4	25.3	26.6
		S/T	1.00	0.81	0.68	0.5	1.00	0.81	0.68	0.5	1.00	1.00	0.71	0.6	1.00	1.00	0.73	0.6	1.00	1.00	0.75	0.6	1.00	1.00	1.00	0.7
		ΔT	32	30	27	23	32	30	27	23	32	30	27	23	32	30	27	23	31	30	26	23	33	31	27	24
		kW	1.89	1.89	1.88	1.9	2.10	2.10	2.09	2.1	2.34	2.33	2.33	2.3	2.59	2.59	2.59	2.6	2.88	2.87	2.87	2.9	3.21	3.21	3.20	3.2
		Amps	6.6	6.6	6.6	6.7	7.6	7.6	7.6	7.6	8.7	8.7	8.6	8.7	9.8	9.8	9.8	9.9	11.1	11.1	11.1	11.2	12.7	12.7	12.6	12.7
		Hi PR	255	256	258	262.7	296	297	299	303.0	338	339	341	345.1	383	384	386	390.5	432	433	435	439.5	484	485	487	491.7
		Lo PR	124	126	129	134.4	132	134	137	141.9	139	140	143	148.5	144	146	149	154.0	150	151	154	159.5	156	158	161	166.3
	1000	MBh	29.6	30.0	30.9	32.2	29.4	29.8	30.6	32.0	28.6	29.0	29.9	31.2	27.3	27.7	28.6	29.9	25.7	26.1	27.0	28.3	24.3	24.7	25.6	26.9
		S/T	1.00	0.88	0.75	0.6	1.00	0.89	0.75	0.6	1.00	1.00	0.78	0.6	1.00	1.00	0.80	0.7	1.00	1.00	0.82	0.7	1.00	1.00	1.00	0.7
		ΔT	31	29	25	22	31	29	25	22	31	29	26	22	31	29	25	22	30	29	25	22	31	30	26	23
		kW	1.90	1.90	1.90	1.91	2.11	2.11	2.11	2.12	2.35	2.35	2.34	2.36	2.60	2.60	2.60	2.61	2.89	2.89	2.88	2.90	3.22	3.22	3.22	3.23
		Amps	6.7	6.7	6.7	6.7	7.6	7.6	7.6	7.7	8.7	8.7	8.7	8.8	9.9	9.9	9.9	9.9	11.2	11.2	11.2	11.2	12.7	12.7	12.7	12.8
		Hi PR	257	259	260	264.8	298	299	301	305.1	340	341	343	347.2	385	386	388	392.6	434	435	437	441.6	486	488	489	493.8
		Lo PR	126	128	131	136.0	134	135	138	143.5	140	142	145	150.0	146	147	150	155.6	151	153	156	161.0	158	159	163	167.8
	1125	MBh	29.9	30.3	31.2	32.5	29.7	30.1	30.9	32.3	28.9	29.3	30.2	31.5	27.6	28.0	28.9	30.2	26.0	26.4	27.3	28.6	24.6	25.0	25.9	27.2
		S/T	1.00	0.92	0.79	0.7	1.00	1.00	0.80	0.7	1.00	1.00	0.82	0.7	1.00	1.00	0.84	0.7	1.00	1.00	0.86	0.7	1.00	1.00	1.00	0.8
		ΔT	30	28	25	21	30	28	25	21	30	28	25	21	30	28	25	21	30	28	24	21	31	29	25	22
		kW	1.91	1.91	1.90	1.9	2.12	2.12	2.11	2.1	2.36	2.35	2.35	2.4	2.61	2.61	2.60	2.6	2.89	2.89	2.89	2.9	3.23	3.23	3.22	3.2
		Amps	6.7	6.7	6.7	6.8	7.7	7.7	7.7	7.7	8.8	8.7	8.7	8.8	9.9	9.9	9.9	10.0	11.2	11.2	11.2	11.3	12.8	12.7	12.7	12.8
		Hi PR	259	260	262	266.5	299	300	302	306.7	342	343	344	348.9	387	388	390	394.3	436	437	439	443.2	488	489	491	495.5
		Lo PR	127	129	132	137.4	135	136	140	144.9	142	143	146	151.4	147	149	152	157.0	153	154	157	162.4	159	161	164	169.2

IDB: Entering Indoor Dry Bulb Temperature

Shaded area reflects AHRI conditions

kW = Total system power

High and low pressures are measured at the liquid and suction service valves.

Amps = outdoor unit amps (comp.+fan)

Expanded Cooling Data — ASXN3N3610A*/CA*FA4226*6A* + EEP

			Outdoor Ambient Temperature																							
			65				75				85				95				105				115			
			Entering Indoor Wet Bulb Temperature																							
IDB	Airflow		59	63	67	71	59	63	67	71	59	63	67	71	59	63	67	71	59	63	67	71	59	63	67	71
70	1050	MBh	34.6	35.1	36.2	-	34.3	34.8	35.9	-	33.4	33.9	34.9	-	31.9	32.3	33.4	-	29.9	30.4	31.5	-	28.2	28.7	29.7	-
		S/T	0.58	0.50	0.36	-	0.58	0.51	0.37	-	0.61	0.53	0.40	-	0.63	0.55	0.42	-	1.00	0.57	0.44	-	1.00	0.63	0.49	-
		ΔT	21	19	16	-	21	19	16	-	21	19	16	-	21	19	16	-	21	19	15	-	22	20	17	-
		kW	2.21	2.21	2.21	-	2.47	2.47	2.46	-	2.75	2.75	2.75	-	3.06	3.06	3.06	-	3.41	3.41	3.40	-	3.82	3.81	3.81	-
		Amps	7.9	7.9	7.8	-	9.0	9.0	9.0	-	10.3	10.3	10.3	-	11.8	11.8	11.7	-	13.3	13.3	13.3	-	15.2	15.2	15.2	-
		Hi PR	256	257	259	-	296	297	299	-	339	340	341	-	384	385	387	-	433	435	436	-	486	487	489	-
		Lo PR	121	123	126	-	129	130	133	-	135	137	140	-	141	142	145	-	146	148	151	-	153	155	158	-
	1150	MBh	35.3	35.7	36.8	-	34.9	35.4	36.5	-	34.0	34.5	35.6	-	32.5	33.0	34.0	-	30.6	31.0	32.1	-	28.8	29.3	30.3	-
		S/T	0.67	0.59	0.46	-	0.67	0.60	0.46	-	0.70	0.62	0.49	-	1.00	0.64	0.51	-	1.00	0.67	0.53	-	1.00	0.72	0.58	-
		ΔT	19	18	14	-	19	17	14	-	20	18	14	-	19	17	14	-	19	17	14	-	20	18	15	-
		kW	2.23	2.23	2.23	-	2.49	2.49	2.48	-	2.77	2.77	2.77	-	3.08	3.08	3.08	-	3.43	3.43	3.42	-	3.83	3.83	3.83	-
		Amps	8.0	7.9	7.9	-	9.1	9.1	9.1	-	10.4	10.4	10.4	-	11.9	11.8	11.8	-	13.4	13.4	13.4	-	15.3	15.3	15.3	-
		Hi PR	259	260	262	-	299	300	302	-	342	343	345	-	387	388	390	-	437	438	439	-	489	490	492	-
		Lo PR	124	125	129	-	131	133	136	-	138	139	142	-	143	145	148	-	149	150	153	-	155	157	160	-
	1350	MBh	35.5	36.0	37.0	-	35.2	35.7	36.7	-	34.3	34.8	35.8	-	32.7	33.2	34.3	-	30.8	31.3	32.4	-	29.1	29.6	30.6	-
		S/T	0.69	0.61	0.48	-	0.69	0.62	0.48	-	0.72	0.64	0.51	-	1.00	0.66	0.53	-	1.00	0.69	0.55	-	1.00	0.74	0.60	-
		ΔT	19	17	13	-	19	17	13	-	19	17	14	-	19	17	13	-	19	17	13	-	20	18	14	-
		kW	2.24	2.24	2.23	-	2.49	2.49	2.49	-	2.78	2.78	2.77	-	3.09	3.09	3.08	-	3.43	3.43	3.43	-	3.84	3.84	3.83	-
		Amps	8.0	8.0	8.0	-	9.2	9.1	9.1	-	10.5	10.5	10.4	-	11.9	11.9	11.8	-	13.5	13.5	13.4	-	15.3	15.3	15.3	-
		Hi PR	260	261	263	-	300	301	303	-	343	344	346	-	388	389	391	-	438	439	440	-	490	491	493	-
		Lo PR	125	126	129	-	132	134	137	-	139	140	143	-	144	146	149	-	150	151	154	-	156	158	161	-
75	1050	MBh	34.7	35.2	36.2	37.8	34.3	34.8	35.9	37.5	33.4	33.9	35.0	36.6	31.9	32.4	33.4	35.0	30.0	30.5	31.5	33.1	28.2	28.7	29.8	31.3
		S/T	0.71	0.63	0.49	0.4	0.71	0.64	0.50	0.4	1.00	0.66	0.53	0.4	1.00	0.68	0.54	0.4	1.00	0.70	0.57	0.4	1.00	0.75	0.62	0.5
		ΔT	25	23	20	16	25	23	20	16	26	24	20	16	25	23	20	16	25	23	20	16	26	24	21	17
		kW	2.21	2.21	2.20	2.2	2.47	2.47	2.46	2.5	2.75	2.75	2.75	2.8	3.06	3.06	3.06	3.1	3.41	3.41	3.40	3.4	3.81	3.81	3.81	3.8
		Amps	7.9	7.9	7.8	7.9	9.0	9.0	9.0	9.1	10.3	10.3	10.3	10.4	11.8	11.7	11.7	11.8	13.3	13.3	13.3	13.4	15.2	15.2	15.2	15.3
		Hi PR	256	257	259	263.3	296	297	299	303.7	339	340	342	346.2	384	386	387	391.8	434	435	437	441.1	486	487	489	493.6
		Lo PR	121	123	126	131.3	129	130	134	138.7	135	137	140	145.2	141	142	146	150.7	146	148	151	156.1	153	155	158	162.9
	1150	MBh	35.3	35.8	36.8	38.4	35.0	35.5	36.5	38.1	34.1	34.5	35.6	37.2	32.5	**33.0**	34.0	35.6	30.6	31.1	32.1	33.7	28.8	29.3	30.4	32.0
		S/T	0.80	0.72	0.59	0.4	0.80	0.73	0.59	0.4	1.00	0.75	0.62	0.5	1.00	**0.77**	0.64	0.5	1.00	0.79	0.66	0.5	1.00	1.00	0.71	0.6
		ΔT	24	22	18	14	24	22	18	14	24	22	18	15	24	**22**	18	14	23	21	18	14	24	23	19	15
		kW	2.23	2.23	2.22	2.24	2.49	2.48	2.48	2.50	2.77	2.77	2.77	2.79	3.08	**3.08**	3.08	3.09	3.43	3.43	3.42	3.44	3.83	3.83	3.83	3.85
		Amps	7.9	7.9	7.9	8.0	9.1	9.1	9.1	9.2	10.4	10.4	10.4	10.5	11.8	**11.8**	11.8	11.9	13.4	13.4	13.4	13.5	15.3	15.3	15.3	15.3
		Hi PR	259	260	262	266.3	299	301	302	306.8	342	343	345	349.2	388	**389**	390	394.9	437	438	440	444.1	489	490	492	496.7
		Lo PR	124	125	129	133.7	131	133	136	141.2	138	139	142	147.7	143	**145**	148	153.2	149	150	153	158.6	156	157	160	165.3
	1350	MBh	35.5	36.0	37.1	38.7	35.2	35.7	36.8	38.3	34.3	34.8	35.8	37.4	32.8	33.2	34.3	35.9	30.8	31.3	32.4	34.0	29.1	29.6	30.6	32.2
		S/T	0.82	0.74	0.61	0.5	0.82	0.75	0.61	0.5	1.00	0.77	0.64	0.5	1.00	0.79	0.66	0.5	1.00	0.81	0.68	0.5	1.00	1.00	0.73	0.6
		ΔT	23	21	18	14	23	21	18	14	23	21	18	14	23	21	18	14	23	21	17	14	24	22	19	15
		kW	2.24	2.23	2.23	2.2	2.49	2.49	2.49	2.5	2.78	2.78	2.77	2.8	3.09	3.09	3.08	3.1	3.43	3.43	3.43	3.4	3.84	3.84	3.83	3.9
		Amps	8.0	8.0	7.9	8.0	9.1	9.1	9.1	9.2	10.5	10.4	10.4	10.5	11.9	11.9	11.8	11.9	13.5	13.4	13.4	13.5	15.3	15.3	15.3	15.4
		Hi PR	260	261	263	267.4	300	302	303	307.9	343	344	346	350.3	389	390	391	396.0	438	439	441	445.2	490	491	493	497.7
		Lo PR	125	126	130	134.7	132	134	137	142.1	139	140	143	148.6	144	146	149	154.1	150	151	154	159.5	156	158	161	166.3

IDB: Entering Indoor Dry Bulb Temperature

Shaded area reflects ACCA (TVA) conditions

kW = Total system power

High and low pressures are measured at the liquid and suction service valves.

Amps = outdoor unit amps (comp.+fan)

Expanded Cooling Data — ASXN3N3610A*/CA*FA4226*6A* + EEP (cont.)

			Outdoor Ambient Temperature																							
			65				75				85				95				105				115			
			Entering Indoor Wet Bulb Temperature																							
IDB	Airflow		59	63	67	71	59	63	67	71	59	63	67	71	59	63	67	71	59	63	67	71	59	63	67	71
80	1050	MBh	34.8	35.3	36.4	38.0	34.5	35.0	36.1	37.6	33.6	34.1	35.1	36.7	32.1	32.5	33.6	35.2	30.1	30.6	31.7	33.3	28.4	28.9	29.9	31.5
		S/T	0.83	0.76	0.62	0.5	1.00	0.76	0.63	0.5	1.00	0.79	0.65	0.5	1.00	0.81	0.67	0.5	1.00	1.00	0.69	0.5	1.00	1.00	0.74	0.6
		ΔT	30	28	24	20	29	28	24	20	30	28	24	21	29	28	24	20	29	27	24	20	30	28	25	21
		kW	2.21	2.21	2.21	2.2	2.47	2.47	2.46	2.5	2.75	2.75	2.75	2.8	3.06	3.06	3.06	3.1	3.41	3.41	3.40	3.4	3.81	3.81	3.81	3.8
		Amps	7.9	7.9	7.8	7.9	9.0	9.0	9.0	9.1	10.3	10.3	10.3	10.4	11.8	11.8	11.7	11.8	13.3	13.3	13.3	13.4	15.2	15.2	15.2	15.3
		Hi PR	256	257	259	263.7	297	298	300	304.2	339	340	342	346.6	385	386	388	392.3	434	435	437	441.5	487	488	490	494.1
		Lo PR	122	124	127	131.8	129	131	134	139.2	136	137	141	145.7	141	143	146	151.2	147	148	151	156.6	154	155	158	163.4
	1150	MBh	35.5	35.9	37.0	38.6	35.1	35.6	36.7	38.3	34.2	34.7	35.8	37.4	32.7	33.2	**34.2**	35.8	30.8	31.2	32.3	33.9	29.0	29.5	30.5	32.1
		S/T	1.00	0.85	0.71	0.6	1.00	0.85	0.72	0.6	1.00	0.88	0.74	0.6	1.00	1.00	**0.76**	0.6	1.00	1.00	0.78	0.6	1.00	1.00	0.84	0.7
		ΔT	28	26	22	19	28	26	22	19	28	26	23	19	28	26	**22**	19	28	26	22	18	29	27	23	20
		kW	2.23	2.23	2.23	2.25	2.49	2.49	2.48	2.50	2.77	2.77	2.77	2.79	3.08	3.08	**3.08**	3.10	3.43	3.43	3.42	3.44	3.83	3.83	3.83	3.85
		Amps	8.0	7.9	7.9	8.0	9.1	9.1	9.1	9.2	10.4	10.4	10.4	10.5	11.8	11.8	**11.8**	11.9	13.4	13.4	13.4	13.5	15.3	15.3	15.3	15.3
		Hi PR	259	261	262	266.8	300	301	303	307.3	342	343	345	349.7	388	389	**391**	395.4	437	438	440	444.6	490	491	493	497.1
		Lo PR	124	126	129	134.3	132	133	137	141.7	138	140	143	148.2	144	145	**149**	153.7	149	151	154	159.1	156	158	161	165.9
	1350	MBh	35.7	36.2	37.2	38.8	35.4	35.9	36.9	38.5	34.5	35.0	36.0	37.6	32.9	33.4	34.5	36.1	31.0	31.5	32.6	34.1	29.3	29.8	30.8	32.4
		S/T	1.00	0.87	0.73	0.6	1.00	0.87	0.74	0.6	1.00	0.90	0.76	0.6	1.00	1.00	0.78	0.6	1.00	1.00	0.80	0.7	1.00	1.00	0.86	0.7
		ΔT	27	25	22	18	27	25	22	18	28	26	22	18	27	25	22	18	27	25	22	18	28	26	23	19
		kW	2.24	2.24	2.23	2.3	2.49	2.49	2.49	2.5	2.78	2.78	2.77	2.8	3.09	3.09	3.08	3.1	3.43	3.43	3.43	3.4	3.84	3.84	3.83	3.9
		Amps	8.0	8.0	8.0	8.0	9.2	9.1	9.1	9.2	10.5	10.5	10.4	10.5	11.9	11.9	11.8	11.9	13.5	13.4	13.4	13.5	15.3	15.3	15.3	15.4
		Hi PR	260	262	263	267.9	301	302	304	308.4	343	344	346	350.8	389	390	392	396.4	438	439	441	445.7	491	492	494	498.2
		Lo PR	125	127	130	135.2	133	134	137	142.7	139	141	144	149.2	145	146	149	154.7	150	152	155	160.1	157	159	162	166.8
85	1050	MBh	35.4	35.9	37.0	38.5	35.1	35.6	36.6	38.2	34.2	34.7	35.7	37.3	32.6	33.1	34.2	35.8	30.7	31.2	32.3	33.9	29.0	29.5	30.5	32.1
		S/T	1.00	0.86	0.72	0.6	1.00	0.86	0.73	0.6	1.00	1.00	0.75	0.6	1.00	1.00	0.77	0.6	1.00	1.00	0.79	0.7	1.00	1.00	1.00	0.7
		ΔT	33	31	28	24	33	31	28	24	33	32	28	24	33	31	28	24	33	31	27	24	34	32	29	25
		kW	2.22	2.22	2.21	2.2	2.47	2.47	2.47	2.5	2.76	2.76	2.75	2.8	3.07	3.07	3.06	3.1	3.41	3.41	3.41	3.4	3.82	3.82	3.81	3.8
		Amps	7.9	7.9	7.9	7.9	9.1	9.1	9.0	9.1	10.4	10.4	10.3	10.4	11.8	11.8	11.8	11.8	13.4	13.4	13.3	13.4	15.2	15.2	15.2	15.3
		Hi PR	258	259	260	264.9	298	299	301	305.4	340	342	343	347.8	386	387	389	393.5	435	436	438	442.7	488	489	491	495.3
		Lo PR	124	125	128	133.6	131	133	136	141.1	138	139	142	147.6	143	145	148	153.1	149	150	153	158.5	155	157	160	165.2
	1150	MBh	36.0	36.5	37.6	39.2	35.7	36.2	37.3	38.8	34.8	35.3	36.3	37.9	33.3	33.7	34.8	36.4	31.3	31.8	32.9	34.5	29.6	30.1	31.1	32.7
		S/T	1.00	0.95	0.81	0.7	1.00	0.96	0.82	0.7	1.00	1.00	0.84	0.7	1.00	1.00	0.86	0.7	1.00	1.00	0.89	0.7	1.00	1.00	1.00	0.8
		ΔT	32	30	26	22	32	30	26	22	32	30	26	23	32	30	26	22	31	29	26	22	32	31	27	23
		kW	2.24	2.23	2.23	2.25	2.49	2.49	2.49	2.51	2.78	2.78	2.77	2.79	3.09	3.09	3.08	3.10	3.43	3.43	3.43	3.45	3.84	3.84	3.83	3.85
		Amps	8.0	8.0	7.9	8.0	9.1	9.1	9.1	9.2	10.5	10.4	10.4	10.5	11.9	11.9	11.8	11.9	13.5	13.4	13.4	13.5	15.3	15.3	15.3	15.4
		Hi PR	261	262	264	268.0	301	302	304	308.5	344	345	346	350.9	389	390	392	396.6	438	440	441	445.8	491	492	494	498.3
		Lo PR	126	128	131	136.1	134	135	138	143.5	140	142	145	150.0	146	147	150	155.5	151	153	156	160.9	158	159	162	167.7
	1350	MBh	36.3	36.8	37.8	39.4	36.0	36.5	37.5	39.1	35.1	35.6	36.6	38.2	33.5	34.0	35.1	36.6	31.6	32.1	33.1	34.7	29.9	30.4	31.4	33.0
		S/T	1.00	0.97	0.83	0.7	1.00	1.00	0.84	0.7	1.00	1.00	0.86	0.7	1.00	1.00	0.88	0.7	1.00	1.00	0.91	0.8	1.00	1.00	1.00	0.8
		ΔT	31	29	26	22	31	29	26	22	31	29	26	22	31	29	26	22	31	29	25	22	32	30	26	23
		kW	2.24	2.24	2.24	2.3	2.50	2.50	2.49	2.5	2.78	2.78	2.78	2.8	3.09	3.09	3.09	3.1	3.44	3.44	3.43	3.5	3.84	3.84	3.84	3.9
		Amps	8.0	8.0	8.0	8.1	9.2	9.2	9.1	9.2	10.5	10.5	10.5	10.5	11.9	11.9	11.9	12.0	13.5	13.5	13.5	13.5	15.3	15.3	15.3	15.4
		Hi PR	262	263	265	269.1	302	303	305	309.6	345	346	347	352.0	390	391	393	397.6	439	441	442	446.9	492	493	495	499.4
		Lo PR	127	129	132	137.1	135	136	139	144.5	141	143	146	151.0	147	148	151	156.5	152	154	157	161.9	159	160	163	168.7

IDB: Entering Indoor Dry Bulb Temperature

Shaded area reflects AHRI conditions

kW = Total system power

High and low pressures are measured at the liquid and suction service valves.

Amps = outdoor unit amps (comp.+fan)

Expanded Cooling Data — ASXN3N4210A*/CA*F4961*6A* + EEP

			Outdoor Ambient Temperature																							
			65				75				85				95				105				115			
			Entering Indoor Wet Bulb Temperature																							
IDB	Airflow		59	63	67	71	59	63	67	71	59	63	67	71	59	63	67	71	59	63	67	71	59	63	67	71
70	1300	MBh	40.1	40.6	41.8	-	39.7	40.3	41.5	-	38.6	39.2	40.4	-	36.8	37.4	38.6	-	34.6	35.2	36.4	-	32.6	33.2	34.4	-
		S/T	0.58	0.50	0.37	-	0.58	0.51	0.37	-	0.61	0.53	0.40	-	0.63	0.55	0.42	-	1.00	0.57	0.44	-	1.00	0.62	0.49	-
		ΔT	21	19	16	-	21	19	15	-	21	19	16	-	21	19	15	-	21	19	15	-	22	20	16	-
		kW	2.55	2.55	2.54	-	2.85	2.84	2.84	-	3.18	3.18	3.17	-	3.54	3.54	3.53	-	3.94	3.94	3.94	-	4.42	4.42	4.41	-
		Amps	9.1	9.0	9.0	-	10.4	10.4	10.4	-	12.0	11.9	11.9	-	13.6	13.6	13.6	-	15.5	15.4	15.4	-	17.6	17.6	17.6	-
		Hi PR	264	266	267	-	306	307	309	-	350	351	353	-	397	398	400	-	448	449	451	-	502	504	505	-
		Lo PR	122	123	126	-	129	131	134	-	136	137	140	-	141	143	146	-	146	148	151	-	153	155	158	-
	1400	MBh	40.7	41.3	42.5	-	40.4	40.9	42.1	-	39.3	39.9	41.1	-	37.5	38.1	39.3	-	35.3	35.9	37.1	-	33.3	33.8	35.0	-
		S/T	0.66	0.58	0.45	-	0.66	0.59	0.45	-	0.69	0.61	0.48	-	1.00	0.63	0.50	-	1.00	0.65	0.52	-	1.00	0.70	0.57	-
		ΔT	19	18	14	-	19	17	14	-	20	18	14	-	19	17	14	-	19	17	14	-	20	18	15	-
		kW	2.57	2.57	2.56	-	2.87	2.86	2.86	-	3.20	3.20	3.19	-	3.56	3.56	3.55	-	3.96	3.96	3.96	-	4.44	4.44	4.43	-
		Amps	9.2	9.1	9.1	-	10.5	10.5	10.5	-	12.0	12.0	12.0	-	13.7	13.7	13.7	-	15.5	15.5	15.5	-	17.7	17.7	17.7	-
		Hi PR	267	269	270	-	309	310	312	-	353	354	356	-	400	401	403	-	451	452	454	-	505	507	508	-
		Lo PR	124	125	129	-	131	133	136	-	138	139	142	-	143	145	148	-	149	150	153	-	156	157	160	-
	1575	MBh	41.1	41.7	42.9	-	40.7	41.3	42.5	-	39.7	40.3	41.5	-	37.9	38.5	39.7	-	35.7	36.2	37.4	-	33.7	34.2	35.4	-
		S/T	0.68	0.61	0.47	-	0.69	0.61	0.48	-	0.71	0.64	0.50	-	1.00	0.66	0.52	-	1.00	0.68	0.54	-	1.00	0.73	0.59	-
		ΔT	19	17	13	-	19	17	13	-	19	17	14	-	19	17	13	-	18	17	13	-	20	18	14	-
		kW	2.58	2.57	2.57	-	2.88	2.87	2.87	-	3.21	3.21	3.20	-	3.57	3.57	3.56	-	3.97	3.97	3.97	-	4.45	4.44	4.44	-
		Amps	9.2	9.2	9.2	-	10.6	10.5	10.5	-	12.1	12.1	12.1	-	13.7	13.7	13.7	-	15.6	15.6	15.5	-	17.7	17.7	17.7	-
		Hi PR	269	270	272	-	311	312	314	-	354	356	357	-	402	403	405	-	452	454	455	-	507	508	510	-
		Lo PR	125	127	130	-	133	134	137	-	139	141	144	-	145	146	149	-	150	151	155	-	157	158	161	-
75	1300	MBh	40.1	40.6	41.8	43.7	39.7	40.3	41.5	43.3	38.7	39.2	40.4	42.3	36.9	37.4	38.6	40.5	34.7	35.2	36.4	38.3	32.6	33.2	34.4	36.2
		S/T	0.70	0.63	0.49	0.4	0.71	0.63	0.50	0.4	1.00	0.66	0.52	0.4	1.00	0.68	0.54	0.4	1.00	0.70	0.57	0.4	1.00	1.00	0.62	0.5
		ΔT	25	23	20	16	25	23	20	16	25	23	20	16	25	23	20	16	25	23	19	16	26	24	21	17
		kW	2.55	2.54	2.54	2.6	2.84	2.84	2.84	2.9	3.18	3.18	3.17	3.2	3.54	3.54	3.53	3.6	3.94	3.94	3.93	4.0	4.42	4.41	4.41	4.4
		Amps	9.0	9.0	9.0	9.1	10.4	10.4	10.4	10.5	11.9	11.9	11.9	12.0	13.6	13.6	13.6	13.7	15.4	15.4	15.4	15.5	17.6	17.6	17.6	17.7
		Hi PR	265	266	268	272.3	306	308	310	314.1	350	351	353	358.0	398	399	401	405.1	448	450	451	456.0	503	504	506	510.3
		Lo PR	122	123	126	131.5	129	131	134	138.9	136	137	140	145.4	141	143	146	150.9	146	148	151	156.3	153	155	158	163.1
	1400	MBh	40.7	41.3	42.5	44.3	40.4	40.9	42.1	44.0	39.3	39.9	41.1	42.9	37.5	**38.1**	39.3	41.1	35.3	35.9	37.1	38.9	33.3	33.9	35.1	36.9
		S/T	0.78	0.71	0.58	0.4	0.79	0.72	0.58	0.4	1.00	0.74	0.61	0.5	1.00	**0.76**	0.63	0.5	1.00	0.78	0.65	0.5	1.00	1.00	0.70	0.6
		ΔT	24	22	18	14	24	22	18	14	24	22	18	15	24	**22**	18	14	23	21	18	14	25	23	19	15
		kW	2.57	2.56	2.56	2.58	2.87	2.86	2.86	2.88	3.20	3.20	3.19	3.21	3.56	**3.56**	3.55	3.58	3.96	3.96	3.96	3.98	4.44	4.43	4.43	4.45
		Amps	9.1	9.1	9.1	9.2	10.5	10.5	10.5	10.6	12.0	12.0	12.0	12.1	13.7	**13.7**	13.7	13.8	15.5	15.5	15.5	15.6	17.7	17.7	17.7	17.8
		Hi PR	268	269	271	275.2	309	311	312	317.1	353	354	356	360.9	400	**402**	403	408.1	451	452	454	459.0	506	507	509	513.3
		Lo PR	124	125	129	133.8	131	133	136	141.2	138	139	143	147.7	143	**145**	148	153.2	149	150	153	158.6	156	157	160	165.4
	1575	MBh	41.1	41.7	42.9	44.7	40.8	41.3	42.5	44.4	39.7	40.3	41.5	43.3	37.9	38.5	39.7	41.5	35.7	36.3	37.5	39.3	33.7	34.3	35.5	37.3
		S/T	0.81	0.73	0.60	0.5	0.81	0.74	0.61	0.5	1.00	0.76	0.63	0.5	1.00	0.78	0.65	0.5	1.00	0.81	0.67	0.5	1.00	1.00	0.72	0.6
		ΔT	23	21	18	14	23	21	17	14	23	21	18	14	23	21	17	14	23	21	17	14	24	22	18	15
		kW	2.57	2.57	2.57	2.6	2.87	2.87	2.87	2.9	3.21	3.20	3.20	3.2	3.57	3.57	3.56	3.6	3.97	3.97	3.96	4.0	4.44	4.44	4.44	4.5
		Amps	9.2	9.2	9.1	9.3	10.6	10.5	10.5	10.6	12.1	12.1	12.0	12.1	13.7	13.7	13.7	13.8	15.6	15.6	15.5	15.6	17.7	17.7	17.7	17.8
		Hi PR	269	270	272	276.6	311	312	314	318.4	355	356	358	362.3	402	403	405	409.5	453	454	456	460.3	507	508	510	514.6
		Lo PR	125	127	130	135.0	133	134	137	142.4	139	141	144	148.9	145	146	149	154.4	150	152	155	159.8	157	158	161	166.6

IDB: Entering Indoor Dry Bulb Temperature

Shaded area reflects ACCA (TVA) conditions

kW = Total system power

High and low pressures are measured at the liquid and suction service valves.

Amps = outdoor unit amps (comp.+fan)

Expanded Cooling Data — ASXN3N4210A*/CA*F4961*6A* + EEP (cont.)

			Outdoor Ambient Temperature																							
			65				75				85				95				105				115			
			Entering Indoor Wet Bulb Temperature																							
IDB	Airflow		59	63	67	71	59	63	67	71	59	63	67	71	59	63	67	71	59	63	67	71	59	63	67	71
80	1300	MBh	40.3	40.9	42.1	43.9	39.9	40.5	41.7	43.5	38.9	39.4	40.6	42.5	37.1	37.6	38.8	40.7	34.9	35.4	36.6	38.5	32.8	33.4	34.6	36.4
		S/T	0.83	0.75	0.62	0.5	1.00	0.76	0.62	0.5	1.00	0.78	0.65	0.5	1.00	0.80	0.67	0.5	1.00	1.00	0.69	0.5	1.00	1.00	0.74	0.6
		ΔT	29	27	24	20	29	27	24	20	30	28	24	20	29	27	24	20	29	27	24	20	30	28	25	21
		kW	2.55	2.54	2.54	2.6	2.85	2.84	2.84	2.9	3.18	3.18	3.17	3.2	3.54	3.54	3.53	3.6	3.94	3.94	3.94	4.0	4.42	4.41	4.41	4.4
		Amps	9.1	9.0	9.0	9.1	10.4	10.4	10.4	10.5	12.0	11.9	11.9	12.0	13.6	13.6	13.6	13.7	15.4	15.4	15.4	15.5	17.6	17.6	17.6	17.7
		Hi PR	265	266	268	272.8	307	308	310	314.6	351	352	354	358.4	398	399	401	405.6	449	450	452	456.5	503	504	506	510.8
		Lo PR	122	124	127	132.0	130	131	134	139.4	136	138	141	146.0	142	143	146	151.5	147	149	152	156.9	154	155	158	163.6
	1400	MBh	40.9	41.5	42.7	44.5	40.6	41.2	42.4	44.2	39.5	40.1	41.3	43.1	37.7	38.3	**39.5**	41.3	35.5	36.1	37.3	39.1	33.5	34.1	35.3	37.1
		S/T	1.00	0.83	0.70	0.6	1.00	0.84	0.71	0.6	1.00	0.86	0.73	0.6	1.00	1.00	**0.75**	0.6	1.00	1.00	0.77	0.6	1.00	1.00	0.82	0.7
		ΔT	28	26	22	19	28	26	22	19	28	26	23	19	28	26	**22**	19	28	26	22	18	29	27	23	20
		kW	2.57	2.57	2.56	2.58	2.87	2.86	2.86	2.88	3.20	3.20	3.19	3.22	3.56	3.56	**3.55**	3.58	3.96	3.96	3.96	3.98	4.44	4.44	4.43	4.45
		Amps	9.2	9.1	9.1	9.2	10.5	10.5	10.5	10.6	12.0	12.0	12.0	12.1	13.7	13.7	**13.7**	13.8	15.5	15.5	15.5	15.6	17.7	17.7	17.7	17.8
		Hi PR	268	269	271	275.7	310	311	313	317.6	354	355	357	361.4	401	402	**404**	408.6	452	453	455	459.5	506	507	509	513.8
		Lo PR	124	126	129	134.3	132	133	137	141.7	138	140	143	148.2	144	145	**149**	153.7	149	151	154	159.1	156	158	161	165.9
	1575	MBh	41.3	41.9	43.1	44.9	41.0	41.5	42.7	44.6	39.9	40.5	41.7	43.5	38.1	38.7	39.9	41.7	35.9	36.5	37.7	39.5	33.9	34.5	35.7	37.5
		S/T	1.00	0.86	0.72	0.6	1.00	0.86	0.73	0.6	1.00	0.89	0.75	0.6	1.00	1.00	0.77	0.6	1.00	1.00	0.80	0.7	1.00	1.00	0.85	0.7
		ΔT	27	25	22	18	27	25	22	18	27	26	22	18	27	25	22	18	27	25	21	18	28	26	23	19
		kW	2.58	2.57	2.57	2.6	2.88	2.87	2.87	2.9	3.21	3.21	3.20	3.2	3.57	3.57	3.56	3.6	3.97	3.97	3.97	4.0	4.45	4.44	4.44	4.5
		Amps	9.2	9.2	9.2	9.3	10.6	10.5	10.5	10.6	12.1	12.1	12.0	12.2	13.7	13.7	13.7	13.8	15.6	15.6	15.5	15.7	17.7	17.7	17.7	17.8
		Hi PR	269	271	272	277.1	311	312	314	318.9	355	356	358	362.8	402	403	405	410.0	453	454	456	460.8	507	509	511	515.1
		Lo PR	126	127	130	135.5	133	135	138	143.0	140	141	144	149.5	145	147	150	155.0	151	152	155	160.4	157	159	162	167.1
85	1300	MBh	41.0	41.5	42.7	44.6	40.6	41.2	42.4	44.2	39.6	40.1	41.3	43.2	37.7	38.3	39.5	41.3	35.5	36.1	37.3	39.1	33.5	34.1	35.3	37.1
		S/T	1.00	0.85	0.72	0.6	1.00	0.86	0.72	0.6	1.00	1.00	0.75	0.6	1.00	1.00	0.77	0.6	1.00	1.00	0.79	0.6	1.00	1.00	1.00	0.7
		ΔT	33	31	28	24	33	31	28	24	33	31	28	24	33	31	28	24	33	31	27	24	34	32	29	25
		kW	2.55	2.55	2.55	2.6	2.85	2.85	2.84	2.9	3.19	3.18	3.18	3.2	3.55	3.54	3.54	3.6	3.95	3.95	3.94	4.0	4.42	4.42	4.42	4.4
		Amps	9.1	9.1	9.0	9.2	10.5	10.4	10.4	10.5	12.0	12.0	11.9	12.0	13.6	13.6	13.6	13.7	15.5	15.5	15.4	15.5	17.6	17.6	17.6	17.7
		Hi PR	266	268	269	274.0	308	309	311	315.9	352	353	355	359.7	399	400	402	406.9	450	451	453	457.8	504	506	507	512.1
		Lo PR	124	126	129	133.8	131	133	136	141.3	138	139	143	147.8	143	145	148	153.3	149	150	153	158.7	156	157	160	165.4
	1400	MBh	41.6	42.2	43.4	45.2	41.3	41.8	43.0	44.9	40.2	40.8	42.0	43.8	38.4	39.0	40.2	42.0	36.2	36.8	38.0	39.8	34.2	34.8	36.0	37.8
		S/T	1.00	0.93	0.80	0.7	1.00	0.94	0.81	0.7	1.00	1.00	0.83	0.7	1.00	1.00	0.85	0.7	1.00	1.00	0.87	0.7	1.00	1.00	1.00	0.8
		ΔT	32	30	26	22	32	30	26	22	32	30	26	23	32	30	26	22	31	29	26	22	32	31	27	23
		kW	2.57	2.57	2.57	2.59	2.87	2.87	2.86	2.89	3.21	3.20	3.20	3.22	3.57	3.56	3.56	3.58	3.97	3.97	3.96	3.99	4.44	4.44	4.44	4.46
		Amps	9.2	9.2	9.1	9.2	10.5	10.5	10.5	10.6	12.1	12.1	12.0	12.1	13.7	13.7	13.7	13.8	15.6	15.6	15.5	15.6	17.7	17.7	17.7	17.8
		Hi PR	269	270	272	277.0	311	312	314	318.8	355	356	358	362.6	402	403	405	409.8	453	454	456	460.7	507	509	510	515.0
		Lo PR	126	128	131	136.1	134	135	138	143.6	140	142	145	150.1	146	147	150	155.6	151	153	156	161.0	158	159	163	167.7
	1575	MBh	42.0	42.6	43.8	45.6	41.6	42.2	43.4	45.3	40.6	41.2	42.4	44.2	38.8	39.4	40.6	42.4	36.6	37.2	38.4	40.2	34.6	35.1	36.3	38.2
		S/T	1.00	0.96	0.82	0.7	1.00	1.00	0.83	0.7	1.00	1.00	0.85	0.7	1.00	1.00	0.87	0.7	1.00	1.00	0.90	0.8	1.00	1.00	1.00	0.8
		ΔT	31	29	26	22	31	29	25	22	31	29	26	22	31	29	25	22	31	29	25	21	32	30	26	23
		kW	2.58	2.58	2.57	2.6	2.88	2.88	2.87	2.9	3.21	3.21	3.21	3.2	3.58	3.57	3.57	3.6	3.98	3.98	3.97	4.0	4.45	4.45	4.44	4.5
		Amps	9.2	9.2	9.2	9.3	10.6	10.6	10.5	10.7	12.1	12.1	12.1	12.2	13.8	13.8	13.7	13.8	15.6	15.6	15.6	15.7	17.8	17.8	17.7	17.8
		Hi PR	271	272	274	278.3	313	314	316	320.2	356	358	359	364.0	404	405	407	411.2	454	456	457	462.1	509	510	512	516.4
		Lo PR	128	129	132	137.4	135	136	140	144.8	141	143	146	151.3	147	148	152	156.8	152	154	157	162.2	159	161	164	169.0

IDB: Entering Indoor Dry Bulb Temperature

Shaded area reflects AHRI conditions

kW = Total system power

High and low pressures are measured at the liquid and suction service valves.

Amps = outdoor unit amps (comp.+fan)

Expanded Cooling Data — ASXN3N6010A*/CA*T4961*4A* + EEP

			Outdoor Ambient Temperature																							
			65				75				85				95				105				115			
			Entering Indoor Wet Bulb Temperature																							
IDB	Airflow		59	63	67	71	59	63	67	71	59	63	67	71	59	63	67	71	59	63	67	71	59	63	67	71
70	1480	MBh	45.7	46.3	47.7	-	45.3	45.9	47.3	-	44.1	44.7	46.1	-	42.0	42.7	44.0	-	39.5	40.2	41.5	-	37.2	37.9	39.2	-
		S/T	0.60	0.52	0.39	-	0.61	0.53	0.39	-	0.63	0.55	0.42	-	0.65	0.57	0.44	-	1.00	0.60	0.46	-	1.00	0.65	0.51	-
		ΔT	21	19	16	-	21	19	16	-	22	20	16	-	21	19	16	-	21	19	15	-	22	20	17	-
		kW	2.97	2.97	2.97	-	3.32	3.31	3.31	-	3.70	3.69	3.69	-	4.11	4.11	4.10	-	4.57	4.57	4.56	-	5.11	5.11	5.10	-
		Amps	10.6	10.6	10.6	-	12.2	12.2	12.1	-	13.9	13.9	13.9	-	15.8	15.8	15.8	-	17.9	17.9	17.9	-	20.4	20.4	20.3	-
		Hi PR	256	257	259	-	297	298	300	-	339	340	342	-	385	386	388	-	434	435	437	-	486	488	489	-
		Lo PR	120	122	125	-	127	129	132	-	134	135	138	-	139	141	144	-	145	146	149	-	151	153	156	-
	1600	MBh	46.4	47.0	48.4	-	46.0	46.6	48.0	-	44.8	45.4	46.8	-	42.7	43.4	44.7	-	40.2	40.9	42.2	-	37.9	38.6	39.9	-
		S/T	0.67	0.60	0.46	-	0.68	0.60	0.47	-	0.71	0.63	0.49	-	0.72	0.65	0.51	-	1.00	0.67	0.53	-	1.00	0.72	0.59	-
		ΔT	20	18	14	-	20	18	14	-	20	18	15	-	20	18	14	-	20	18	14	-	21	19	15	-
		kW	3.00	2.99	2.99	-	3.34	3.33	3.33	-	3.72	3.72	3.71	-	4.13	4.13	4.12	-	4.59	4.59	4.58	-	5.13	5.13	5.12	-
		Amps	10.7	10.7	10.7	-	12.3	12.3	12.2	-	14.0	14.0	14.0	-	15.9	15.9	15.9	-	18.0	18.0	18.0	-	20.5	20.5	20.4	-
		Hi PR	259	260	262	-	299	300	302	-	342	343	345	-	387	388	390	-	436	438	439	-	489	490	492	-
		Lo PR	122	124	127	-	129	131	134	-	136	137	140	-	141	143	146	-	147	148	151	-	153	155	158	-
	1800	MBh	46.9	47.6	49.0	-	46.5	47.2	48.5	-	45.3	46.0	47.3	-	43.3	43.9	45.3	-	40.8	41.4	42.8	-	38.5	39.1	40.5	-
		S/T	0.70	0.63	0.49	-	0.71	0.63	0.49	-	0.73	0.66	0.52	-	0.75	0.68	0.54	-	1.00	0.70	0.56	-	1.00	0.75	0.61	-
		ΔT	19	17	14	-	19	17	13	-	19	17	14	-	19	17	13	-	19	17	13	-	20	18	14	-
		kW	3.01	3.00	3.00	-	3.35	3.35	3.34	-	3.73	3.73	3.72	-	4.14	4.14	4.13	-	4.60	4.60	4.59	-	5.14	5.14	5.14	-
		Amps	10.8	10.7	10.7	-	12.3	12.3	12.3	-	14.1	14.1	14.0	-	16.0	15.9	15.9	-	18.1	18.1	18.0	-	20.5	20.5	20.5	-
		Hi PR	260	261	263	-	301	302	304	-	343	344	346	-	389	390	392	-	438	439	441	-	491	492	494	-
		Lo PR	124	125	128	-	131	132	135	-	137	139	142	-	143	144	147	-	148	150	153	-	155	156	159	-
75	1480	MBh	45.7	46.4	47.7	49.8	45.3	46.0	47.3	49.4	44.1	44.8	46.1	48.2	42.1	42.7	44.1	46.2	39.5	40.2	41.6	43.6	37.2	37.9	39.3	41.3
		S/T	0.73	0.65	0.52	0.4	0.74	0.66	0.52	0.4	1.00	0.68	0.55	0.4	1.00	0.70	0.57	0.4	1.00	0.73	0.59	0.4	1.00	0.78	0.64	0.5
		ΔT	26	24	20	16	26	24	20	16	26	24	20	16	26	24	20	16	25	23	20	16	27	25	21	17
		kW	2.97	2.97	2.96	3.0	3.31	3.31	3.31	3.3	3.69	3.69	3.69	3.7	4.11	4.10	4.10	4.1	4.57	4.57	4.56	4.6	5.11	5.11	5.10	5.1
		Amps	10.6	10.6	10.6	10.7	12.2	12.1	12.1	12.2	13.9	13.9	13.9	14.0	15.8	15.8	15.8	15.9	17.9	17.9	17.9	18.0	20.4	20.4	20.3	20.5
		Hi PR	256	257	259	263.7	297	298	300	304.2	339	340	342	346.6	385	386	388	392.3	434	435	437	441.5	487	488	490	494.1
		Lo PR	120	122	125	129.7	127	129	132	137.1	134	135	138	143.5	139	141	144	148.9	145	146	149	154.2	151	153	156	160.9
	1600	MBh	46.4	47.1	48.4	50.5	46.0	46.6	48.0	50.1	44.8	45.5	46.8	48.9	42.7	**43.4**	44.8	46.9	40.2	40.9	42.2	44.3	37.9	38.6	40.0	42.0
		S/T	0.80	0.73	0.59	0.4	0.81	0.73	0.60	0.5	1.00	0.76	0.62	0.5	1.00	**0.78**	0.64	0.5	1.00	0.80	0.66	0.5	1.00	1.00	0.72	0.6
		ΔT	24	22	19	15	24	22	19	15	24	22	19	15	24	**22**	19	15	24	22	18	15	25	23	20	16
		kW	2.99	2.99	2.98	3.01	3.33	3.33	3.33	3.35	3.72	3.71	3.71	3.73	4.13	**4.13**	4.12	4.15	4.59	4.59	4.58	4.61	5.13	5.13	5.12	5.15
		Amps	10.7	10.7	10.7	10.8	12.3	12.2	12.2	12.3	14.0	14.0	14.0	14.1	15.9	**15.9**	15.9	16.0	18.0	18.0	18.0	18.1	20.5	20.5	20.4	20.6
		Hi PR	259	260	262	266.3	299	301	302	306.8	342	343	345	349.2	387	**389**	390	394.9	437	438	440	444.1	489	490	492	496.6
		Lo PR	122	124	127	131.8	129	131	134	139.1	136	137	140	145.5	141	**143**	146	151.0	147	148	151	156.3	153	155	158	162.9
	1800	MBh	47.0	47.6	49.0	51.1	46.6	47.2	48.6	50.7	45.4	46.0	47.4	49.5	43.3	43.9	45.3	47.4	40.8	41.4	42.8	44.9	38.5	39.1	40.5	42.6
		S/T	0.83	0.76	0.62	0.5	0.84	0.76	0.63	0.5	1.00	0.79	0.65	0.5	1.00	0.81	0.67	0.5	1.00	0.83	0.69	0.5	1.00	1.00	0.74	0.6
		ΔT	23	21	18	14	23	21	18	14	24	22	18	14	23	21	18	14	23	21	17	14	24	22	19	15
		kW	3.01	3.00	3.00	3.0	3.35	3.34	3.34	3.4	3.73	3.73	3.72	3.7	4.14	4.14	4.13	4.2	4.60	4.60	4.59	4.6	5.14	5.14	5.13	5.2
		Amps	10.7	10.7	10.7	10.8	12.3	12.3	12.3	12.4	14.1	14.0	14.0	14.1	15.9	15.9	15.9	16.0	18.1	18.0	18.0	18.1	20.5	20.5	20.5	20.6
		Hi PR	261	262	263	268.0	301	302	304	308.4	343	345	346	350.9	389	390	392	396.5	438	439	441	445.7	491	492	494	498.3
		Lo PR	124	125	128	133.3	131	132	136	140.6	137	139	142	147.0	143	144	147	152.5	148	150	153	157.8	155	156	159	164.4

IDB: Entering Indoor Dry Bulb Temperature

Shaded area reflects ACCA (TVA) conditions

kW = Total system power

High and low pressures are measured at the liquid and suction service valves.

Amps = outdoor unit amps (comp.+fan)

Expanded Cooling Data — ASXN3N6010A*/CA*T4961*4A* + EEP (cont.)

			Outdoor Ambient Temperature																							
			65				75				85				95				105				115			
			Entering Indoor Wet Bulb Temperature																							
IDB	Airflow		59	63	67	71	59	63	67	71	59	63	67	71	59	63	67	71	59	63	67	71	59	63	67	71
80	1480	MBh	46.0	46.6	48.0	50.1	45.5	46.2	47.6	49.6	44.3	45.0	46.4	48.5	42.3	42.9	44.3	46.4	39.8	40.4	41.8	43.9	37.5	38.1	39.5	41.6
		S/T	0.86	0.78	0.64	0.5	1.00	0.79	0.65	0.5	1.00	0.81	0.67	0.5	1.00	0.83	0.69	0.5	1.00	1.00	0.72	0.6	1.00	1.00	0.77	0.6
		ΔT	30	28	24	21	30	28	24	21	30	28	25	21	30	28	24	20	30	28	24	20	31	29	25	21
		kW	2.97	2.97	2.97	3.0	3.32	3.31	3.31	3.3	3.70	3.69	3.69	3.7	4.11	4.11	4.10	4.1	4.57	4.57	4.56	4.6	5.11	5.11	5.10	5.1
		Amps	10.6	10.6	10.6	10.7	12.2	12.2	12.1	12.3	13.9	13.9	13.9	14.0	15.8	15.8	15.8	15.9	17.9	17.9	17.9	18.0	20.4	20.4	20.3	20.5
		Hi PR	257	258	260	264.2	297	298	300	304.7	340	341	343	347.1	385	386	388	392.8	435	436	438	442.0	487	488	490	494.5
		Lo PR	121	122	125	130.3	128	129	132	137.6	134	136	139	144.0	140	141	144	149.4	145	147	150	154.7	152	153	156	161.4
	1600	MBh	46.6	47.3	48.7	50.8	46.2	46.9	48.3	50.3	45.0	45.7	47.1	49.1	43.0	43.6	**45.0**	47.1	40.5	41.1	42.5	44.6	38.2	38.8	40.2	42.3
		S/T	1.00	0.85	0.72	0.6	1.00	0.86	0.72	0.6	1.00	0.89	0.75	0.6	1.00	0.91	**0.77**	0.6	1.00	1.00	0.79	0.6	1.00	1.00	0.84	0.7
		ΔT	29	27	23	19	28	27	23	19	29	27	23	19	28	27	**23**	19	28	26	23	19	29	27	24	20
		kW	3.00	2.99	2.99	3.01	3.34	3.33	3.33	3.35	3.72	3.72	3.71	3.74	4.13	4.13	**4.12**	4.15	4.59	4.59	4.58	4.61	5.13	5.13	5.12	5.15
		Amps	10.7	10.7	10.7	10.8	12.3	12.3	12.2	12.3	14.0	14.0	14.0	14.1	15.9	15.9	**15.9**	16.0	18.0	18.0	18.0	18.1	20.5	20.5	20.4	20.6
		Hi PR	259	261	262	266.8	300	301	303	307.3	342	343	345	349.7	388	389	**391**	395.3	437	438	440	444.6	490	491	493	497.1
		Lo PR	123	124	127	132.3	130	131	135	139.7	136	138	141	146.1	142	143	**146**	151.5	147	149	152	156.8	154	155	158	163.5
	1800	MBh	47.2	47.8	49.2	51.3	46.8	47.4	48.8	50.9	45.6	46.2	47.6	49.7	43.5	44.2	45.6	47.6	41.0	41.7	43.0	45.1	38.7	39.4	40.7	42.8
		S/T	1.00	0.88	0.75	0.6	1.00	0.89	0.75	0.6	1.00	0.91	0.78	0.6	1.00	0.93	0.80	0.7	1.00	1.00	0.82	0.7	1.00	1.00	0.87	0.7
		ΔT	28	26	22	18	28	26	22	18	28	26	22	19	28	26	22	18	27	25	22	18	29	27	23	19
		kW	3.01	3.00	3.00	3.0	3.35	3.35	3.34	3.4	3.73	3.73	3.72	3.7	4.14	4.14	4.13	4.2	4.60	4.60	4.59	4.6	5.14	5.14	5.14	5.2
		Amps	10.8	10.7	10.7	10.8	12.3	12.3	12.3	12.4	14.1	14.1	14.0	14.1	16.0	15.9	15.9	16.0	18.1	18.1	18.0	18.1	20.5	20.5	20.5	20.6
		Hi PR	261	262	264	268.4	302	303	304	308.9	344	345	347	351.3	390	391	393	397.0	439	440	442	446.2	491	492	494	498.8
		Lo PR	124	126	129	133.8	131	133	136	141.2	138	139	142	147.6	143	145	148	153.0	149	150	153	158.3	155	157	160	165.0
85	1480	MBh	46.7	47.4	48.7	50.8	46.3	47.0	48.3	50.4	45.1	45.8	47.1	49.2	43.1	43.7	45.1	47.2	40.5	41.2	42.6	44.7	38.3	38.9	40.3	42.4
		S/T	1.00	0.88	0.75	0.6	1.00	0.89	0.75	0.6	1.00	1.00	0.78	0.6	1.00	1.00	0.80	0.7	1.00	1.00	0.82	0.7	1.00	1.00	0.87	0.7
		ΔT	34	32	28	24	34	32	28	24	34	32	28	25	34	32	28	24	33	31	28	24	35	33	29	25
		kW	2.98	2.98	2.97	3.0	3.32	3.32	3.31	3.3	3.70	3.70	3.69	3.7	4.12	4.11	4.11	4.1	4.58	4.57	4.57	4.6	5.12	5.11	5.11	5.1
		Amps	10.6	10.6	10.6	10.7	12.2	12.2	12.2	12.3	13.9	13.9	13.9	14.0	15.8	15.8	15.8	15.9	17.9	17.9	17.9	18.0	20.4	20.4	20.4	20.5
		Hi PR	258	259	261	265.4	299	300	301	305.9	341	342	344	348.3	387	388	390	394.0	436	437	439	443.2	488	489	491	495.7
		Lo PR	122	124	127	132.1	130	131	134	139.4	136	138	141	145.8	142	143	146	151.2	147	148	151	156.5	154	155	158	163.2
	1600	MBh	47.4	48.1	49.4	51.5	47.0	47.7	49.0	51.1	45.8	46.5	47.8	49.9	43.8	44.4	45.8	47.9	41.2	41.9	43.3	45.3	38.9	39.6	41.0	43.1
		S/T	1.00	0.96	0.82	0.7	1.00	0.96	0.83	0.7	1.00	1.00	0.85	0.7	1.00	1.00	0.87	0.7	1.00	1.00	0.89	0.7	1.00	1.00	1.00	0.8
		ΔT	32	30	27	23	32	30	27	23	33	31	27	23	32	30	27	23	32	30	26	23	33	31	28	24
		kW	3.00	3.00	2.99	3.02	3.34	3.34	3.33	3.36	3.72	3.72	3.72	3.74	4.14	4.13	4.13	4.15	4.60	4.59	4.59	4.62	5.14	5.14	5.13	5.16
		Amps	10.7	10.7	10.7	10.8	12.3	12.3	12.3	12.4	14.0	14.0	14.0	14.1	15.9	15.9	15.9	16.0	18.0	18.0	18.0	18.1	20.5	20.5	20.5	20.6
		Hi PR	261	262	264	268.0	301	302	304	308.5	343	345	346	350.9	389	390	392	396.5	438	440	441	445.8	491	492	494	498.3
		Lo PR	124	126	129	134.1	132	133	136	141.5	138	140	143	147.9	144	145	148	153.3	149	150	153	158.6	156	157	160	165.3
	1800	MBh	48.0	48.6	50.0	52.1	47.6	48.2	49.6	51.7	46.4	47.0	48.4	50.5	44.3	45.0	46.3	48.4	41.8	42.4	43.8	45.9	39.5	40.1	41.5	43.6
		S/T	1.00	0.99	0.85	0.7	1.00	0.99	0.85	0.7	1.00	1.00	0.88	0.7	1.00	1.00	0.90	0.8	1.00	1.00	0.92	0.8	1.00	1.00	1.00	0.8
		ΔT	32	30	26	22	32	30	26	22	32	30	26	22	32	30	26	22	31	29	26	22	32	31	27	23
		kW	3.01	3.01	3.00	3.0	3.35	3.35	3.35	3.4	3.74	3.73	3.73	3.8	4.15	4.15	4.14	4.2	4.61	4.61	4.60	4.6	5.15	5.15	5.14	5.2
		Amps	10.8	10.8	10.7	10.9	12.4	12.3	12.3	12.4	14.1	14.1	14.1	14.2	16.0	16.0	15.9	16.1	18.1	18.1	18.1	18.2	20.6	20.6	20.5	20.6
		Hi PR	262	263	265	269.6	303	304	306	310.1	345	346	348	352.5	391	392	394	398.2	440	441	443	447.4	493	494	495	500.0
		Lo PR	126	127	131	135.6	133	135	138	143.0	140	141	144	149.4	145	147	150	154.8	150	152	155	160.1	157	159	162	166.8

IDB: Entering Indoor Dry Bulb Temperature

Shaded area reflects AHRI conditions

kW = Total system power

High and low pressures are measured at the liquid and suction service valves.

Amps = outdoor unit amps (comp.+fan)

Expanded Cooling Data — ASXN3N4810A*/CA*F4961*6A* + EEP

			Outdoor Ambient Temperature																							
			65				75				85				95				105				115			
			Entering Indoor Wet Bulb Temperature																							
IDB	Airflow		59	63	67	71	59	63	67	71	59	63	67	71	59	63	67	71	59	63	67	71	59	63	67	71
70	1525	MBh	55.7	56.4	58.1	-	55.2	55.9	57.6	-	53.7	54.5	56.2	-	51.3	52.0	53.7	-	48.2	49.0	50.7	-	45.5	46.3	47.9	-
		S/T	0.61	0.54	0.42	-	0.62	0.55	0.42	-	0.64	0.57	0.45	-	1.00	0.59	0.47	-	1.00	0.61	0.49	-	1.00	0.66	0.53	-
		ΔT	22	20	16	-	22	19	16	-	22	20	16	-	22	19	16	-	21	19	15	-	23	21	17	-
		kW	3.69	3.68	3.68	-	4.14	4.14	4.13	-	4.65	4.64	4.64	-	5.20	5.19	5.18	-	5.81	5.80	5.80	-	6.53	6.52	6.52	-
		Amps	13.9	13.9	13.8	-	16.0	15.9	15.9	-	18.3	18.3	18.2	-	20.8	20.8	20.7	-	23.6	23.6	23.5	-	26.9	26.9	26.8	-
		Hi PR	281	282	284	-	325	326	328	-	371	372	374	-	421	422	424	-	474	475	477	-	531	532	534	-
		Lo PR	127	129	132	-	135	137	140	-	142	143	147	-	147	149	152	-	153	155	158	-	160	161	165	-
	1750	MBh	57.8	58.6	60.2	-	57.3	58.1	59.8	-	55.9	56.7	58.3	-	53.4	54.2	55.9	-	50.4	51.2	52.8	-	47.7	48.4	50.1	-
		S/T	0.66	0.59	0.46	-	0.66	0.59	0.47	-	1.00	0.61	0.49	-	1.00	0.63	0.51	-	1.00	0.65	0.53	-	1.00	1.00	0.57	-
		ΔT	19	17	13	-	19	17	13	-	20	18	14	-	19	17	13	-	19	17	13	-	20	18	14	-
		kW	3.73	3.72	3.72	-	4.18	4.18	4.17	-	4.69	4.68	4.68	-	5.24	5.23	5.23	-	5.85	5.85	5.84	-	6.57	6.56	6.56	-
		Amps	14.1	14.0	14.0	-	16.1	16.1	16.1	-	18.5	18.4	18.4	-	21.0	21.0	20.9	-	23.8	23.8	23.7	-	27.1	27.0	27.0	-
		Hi PR	286	287	289	-	330	331	333	-	376	377	379	-	426	427	429	-	479	481	482	-	536	538	540	-
		Lo PR	132	134	137	-	140	142	145	-	147	148	151	-	152	154	157	-	158	159	163	-	165	166	170	-
	2000	MBh	59.5	60.3	61.9	-	59.0	59.8	61.4	-	57.6	58.4	60.0	-	55.1	55.9	57.5	-	52.1	52.9	54.5	-	49.4	50.1	51.8	-
		S/T	0.64	0.57	0.44	-	1.00	0.57	0.45	-	1.00	0.59	0.47	-	1.00	0.61	0.49	-	1.00	0.63	0.51	-	1.00	1.00	0.55	-
		ΔT	18	16	12	-	18	16	12	-	19	16	12	-	18	16	12	-	18	16	12	-	19	17	13	-
		kW	3.75	3.74	3.74	-	4.20	4.20	4.19	-	4.71	4.70	4.70	-	5.26	5.25	5.25	-	5.87	5.87	5.86	-	6.59	6.58	6.58	-
		Amps	14.2	14.1	14.1	-	16.2	16.2	16.2	-	18.6	18.5	18.5	-	21.1	21.0	21.0	-	23.9	23.8	23.8	-	27.2	27.1	27.1	-
		Hi PR	290	291	293	-	333	335	337	-	380	381	383	-	429	430	432	-	483	484	486	-	540	541	543	-
		Lo PR	136	138	141	-	144	145	148	-	150	152	155	-	156	158	161	-	162	163	166	-	168	170	173	-
75	1525	MBh	55.7	56.5	58.1	60.6	55.2	56.0	57.6	60.1	53.8	54.5	56.2	58.7	51.3	**52.1**	53.7	56.2	48.3	49.1	50.7	53.2	45.5	46.3	47.9	50.5
		S/T	0.73	0.66	0.54	0.4	1.00	0.67	0.54	0.4	1.00	0.69	0.57	0.4	1.00	**0.71**	0.58	0.5	1.00	0.73	0.60	0.5	1.00	1.00	0.65	0.5
		ΔT	26	24	20	16	26	24	20	16	27	24	21	16	26	**24**	20	16	26	24	20	16	27	25	21	17
		kW	3.68	3.68	3.67	3.7	4.14	4.13	4.13	4.2	4.64	4.64	4.63	4.7	5.19	**5.19**	5.18	5.2	5.81	5.80	5.79	5.8	6.52	6.52	6.51	6.5
		Amps	13.9	13.8	13.8	14.0	15.9	15.9	15.9	16.0	18.3	18.2	18.2	18.4	20.8	**20.8**	20.7	20.9	23.6	23.6	23.5	23.7	26.9	26.8	26.8	27.0
		Hi PR	281	282	284	289.3	325	326	328	333.3	371	372	374	379.3	421	**422**	424	428.9	474	476	478	482.4	531	533	535	539.5
		Lo PR	127	129	132	137.6	135	137	140	145.2	142	143	147	151.9	147	**149**	152	157.6	153	155	158	163.1	160	162	165	170.1
	1750	MBh	57.9	58.6	60.3	62.8	57.4	58.1	59.8	62.3	55.9	56.7	58.4	60.9	53.5	54.2	55.9	58.4	50.4	51.2	52.9	55.4	47.7	48.5	50.1	52.6
		S/T	0.77	0.70	0.58	0.4	1.00	0.71	0.58	0.5	1.00	0.73	0.61	0.5	1.00	0.75	0.63	0.5	1.00	1.00	0.65	0.5	1.00	1.00	0.69	0.6
		ΔT	24	22	18	14	24	22	18	14	24	22	18	14	24	22	18	14	24	22	18	14	25	23	19	15
		kW	3.72	3.72	3.71	3.75	4.18	4.18	4.17	4.20	4.69	4.68	4.67	4.71	5.23	5.23	5.22	5.26	5.85	5.84	5.83	5.87	6.56	6.56	6.55	6.59
		Amps	14.1	14.0	14.0	14.2	16.1	16.1	16.1	16.2	18.4	18.4	18.4	18.6	21.0	20.9	20.9	21.1	23.8	23.7	23.7	23.9	27.0	27.0	27.0	27.2
		Hi PR	286	288	290	294.5	330	332	334	338.4	376	378	380	384.5	426	427	429	434.1	480	481	483	487.6	537	538	540	544.7
		Lo PR	132	134	137	142.5	140	142	145	150.2	147	148	151	156.8	152	154	157	162.5	158	160	163	168.1	165	166	170	175.0
	2000	MBh	59.5	60.3	62.0	64.5	59.1	59.8	61.5	64.0	57.6	58.4	60.0	62.5	55.2	55.9	57.6	60.1	52.1	52.9	54.6	57.1	49.4	50.2	51.8	54.3
		S/T	1.00	0.68	0.56	0.4	1.00	0.69	0.56	0.4	1.00	0.71	0.59	0.5	1.00	1.00	0.61	0.5	1.00	1.00	0.63	0.5	1.00	1.00	0.67	0.5
		ΔT	23	21	17	13	23	21	17	13	23	21	17	13	23	21	17	13	23	21	17	12	24	22	18	14
		kW	3.75	3.74	3.73	3.8	4.20	4.20	4.19	4.2	4.71	4.70	4.69	4.7	5.25	5.25	5.24	5.3	5.87	5.86	5.85	5.9	6.58	6.58	6.57	6.6
		Amps	14.1	14.1	14.1	14.3	16.2	16.2	16.2	16.3	18.5	18.5	18.5	18.6	21.0	21.0	21.0	21.2	23.9	23.8	23.8	24.0	27.1	27.1	27.1	27.2
		Hi PR	290	291	293	297.8	334	335	337	341.8	380	381	383	387.8	429	431	433	437.4	483	484	486	490.9	540	541	543	548.0
		Lo PR	136	138	141	146.1	144	145	148	153.8	150	152	155	160.5	156	158	161	166.1	162	163	166	171.7	169	170	173	178.6

IDB: Entering Indoor Dry Bulb Temperature

Shaded area reflects ACCA (TVA) conditions

kW = Total system power

High and low pressures are measured at the liquid and suction service valves.

Amps = outdoor unit amps (comp.+fan)

Expanded Cooling Data — ASXN3N4810A*/CA*F4961*6A* + EEP (cont.)

			Outdoor Ambient Temperature																							
			65				75				85				95				105				115			
			Entering Indoor Wet Bulb Temperature																							
IDB	Airflow		59	63	67	71	59	63	67	71	59	63	67	71	59	63	67	71	59	63	67	71	59	63	67	71
80	1525	MBh	56.0	56.8	58.4	60.9	55.5	56.3	57.9	60.4	54.1	54.8	56.5	59.0	51.6	52.4	**54.0**	56.5	48.6	49.3	51.0	53.5	45.8	46.6	48.2	50.7
		S/T	1.00	0.78	0.65	0.5	1.00	0.78	0.66	0.5	1.00	0.81	0.68	0.6	1.00	1.00	**0.70**	0.6	1.00	1.00	0.72	0.6	1.00	1.00	0.77	0.6
		ΔT	31	29	25	21	31	29	25	21	31	29	25	21	31	29	**25**	21	31	29	25	20	32	30	26	22
		kW	3.69	3.68	3.68	3.7	4.14	4.14	4.13	4.2	4.65	4.64	4.64	4.7	5.20	5.19	**5.18**	5.2	5.81	5.80	5.80	5.8	6.53	6.52	6.51	6.5
		Amps	13.9	13.9	13.8	14.0	16.0	15.9	15.9	16.1	18.3	18.3	18.2	18.4	20.8	20.8	**20.7**	20.9	23.6	23.6	23.5	23.7	26.9	26.9	26.8	27.0
		Hi PR	282	283	285	289.8	326	327	329	333.8	372	373	375	379.8	421	423	**425**	429.4	475	476	478	482.9	532	533	535	540.0
		Lo PR	128	130	133	138.1	136	137	140	145.8	142	144	147	152.5	148	150	**153**	158.1	154	155	158	163.7	161	162	165	170.6
	1750	MBh	58.1	58.9	60.6	63.1	57.7	58.4	60.1	62.6	56.2	57.0	58.6	61.1	53.7	54.5	56.2	58.7	50.7	51.5	53.2	55.7	48.0	48.8	50.4	52.9
		S/T	1.00	0.82	0.69	0.6	1.00	0.83	0.70	0.6	1.00	1.00	0.72	0.6	1.00	1.00	0.74	0.6	1.00	1.00	0.76	0.6	1.00	1.00	1.00	0.7
		ΔT	29	27	23	19	29	27	23	19	29	27	23	19	29	27	23	19	28	26	22	18	30	28	24	20
		kW	3.73	3.72	3.72	3.75	4.18	4.18	4.17	4.20	4.69	4.68	4.68	4.71	5.24	5.23	5.22	5.26	5.85	5.84	5.84	5.87	6.57	6.56	6.56	6.59
		Amps	14.1	14.0	14.0	14.2	16.1	16.1	16.1	16.2	18.5	18.4	18.4	18.6	21.0	21.0	20.9	21.1	23.8	23.8	23.7	23.9	27.1	27.0	27.0	27.2
		Hi PR	287	288	290	295.0	331	332	334	339.0	377	378	380	385.0	427	428	430	434.6	480	481	483	488.1	537	538	540	545.2
		Lo PR	133	135	138	143.1	141	142	145	150.7	147	149	152	157.4	153	155	158	163.1	159	160	163	168.6	165	167	170	175.6
	2000	MBh	59.8	60.6	62.3	64.8	59.3	60.1	61.8	64.3	57.9	58.7	60.3	62.8	55.4	56.2	57.9	60.4	52.4	53.2	54.8	57.3	49.7	50.4	52.1	54.6
		S/T	1.00	0.80	0.67	0.5	1.00	1.00	0.68	0.5	1.00	1.00	0.70	0.6	1.00	1.00	0.72	0.6	1.00	1.00	0.74	0.6	1.00	1.00	1.00	0.7
		ΔT	28	26	22	17	28	26	22	17	28	26	22	18	28	25	22	17	27	25	21	17	29	27	23	18
		kW	3.75	3.74	3.74	3.8	4.20	4.20	4.19	4.2	4.71	4.70	4.70	4.7	5.26	5.25	5.24	5.3	5.87	5.87	5.86	5.9	6.59	6.58	6.58	6.6
		Amps	14.2	14.1	14.1	14.3	16.2	16.2	16.2	16.3	18.6	18.5	18.5	18.7	21.1	21.0	21.0	21.2	23.9	23.8	23.8	24.0	27.2	27.1	27.1	27.3
		Hi PR	290	291	293	298.3	334	335	337	342.3	380	382	383	388.3	430	431	433	437.9	483	485	487	491.4	540	542	544	548.5
		Lo PR	137	138	141	146.7	144	146	149	154.3	151	152	156	161.0	157	158	161	166.7	162	164	167	172.2	169	171	174	179.2
85	1525	MBh	56.9	57.7	59.3	61.8	56.4	57.2	58.8	61.3	55.0	55.8	57.4	59.9	52.5	53.3	54.9	57.4	49.5	50.3	51.9	54.4	46.7	47.5	49.2	51.7
		S/T	1.00	0.87	0.75	0.6	1.00	1.00	0.75	0.6	1.00	1.00	0.78	0.6	1.00	1.00	0.79	0.7	1.00	1.00	1.00	0.7	1.00	1.00	1.00	0.7
		ΔT	35	33	29	25	35	33	29	25	35	33	29	25	35	33	29	25	35	33	29	25	36	34	30	26
		kW	3.70	3.69	3.68	3.7	4.15	4.15	4.14	4.2	4.66	4.65	4.64	4.7	5.20	5.20	5.19	5.2	5.82	5.81	5.81	5.8	6.54	6.53	6.52	6.6
		Amps	13.9	13.9	13.9	14.0	16.0	16.0	15.9	16.1	18.3	18.3	18.3	18.4	20.8	20.8	20.8	20.9	23.6	23.6	23.6	23.7	26.9	26.9	26.9	27.0
		Hi PR	283	284	286	291.1	327	328	330	335.1	373	374	376	381.1	423	424	426	430.7	476	477	479	484.2	533	534	536	541.3
		Lo PR	130	131	135	140.0	138	139	142	147.6	144	146	149	154.3	150	151	155	160.0	155	157	160	165.6	162	164	167	172.5
	1750	MBh	59.1	59.8	61.5	64.0	58.6	59.4	61.0	63.5	57.1	57.9	59.6	62.1	54.7	55.5	57.1	59.6	51.7	52.4	54.1	56.6	48.9	49.7	51.3	53.8
		S/T	1.00	1.00	0.79	0.7	1.00	1.00	0.79	0.7	1.00	1.00	0.82	0.7	1.00	1.00	1.00	0.7	1.00	1.00	1.00	0.7	1.00	1.00	1.00	0.8
		ΔT	33	31	27	23	33	31	27	23	33	31	27	23	33	31	27	23	33	30	27	22	34	32	28	24
		kW	3.74	3.73	3.72	3.76	4.19	4.19	4.18	4.21	4.70	4.69	4.69	4.72	5.24	5.24	5.23	5.27	5.86	5.85	5.85	5.88	6.58	6.57	6.56	6.60
		Amps	14.1	14.1	14.1	14.2	16.2	16.2	16.1	16.3	18.5	18.5	18.4	18.6	21.0	21.0	21.0	21.1	23.8	23.8	23.8	23.9	27.1	27.1	27.0	27.2
		Hi PR	288	289	291	296.3	332	333	335	340.3	378	380	381	386.3	428	429	431	435.9	481	483	485	489.4	538	540	542	546.5
		Lo PR	135	136	140	144.9	142	144	147	152.6	149	151	154	159.3	155	156	160	164.9	160	162	165	170.5	167	169	172	177.4
	2000	MBh	60.8	61.5	63.2	65.7	60.3	61.0	62.7	65.2	58.8	59.6	61.3	63.8	56.4	57.1	58.8	61.3	53.3	54.1	55.8	58.3	50.6	51.4	53.0	55.5
		S/T	1.00	1.00	0.77	0.6	1.00	1.00	0.77	0.6	1.00	1.00	0.80	0.7	1.00	1.00	1.00	0.7	1.00	1.00	1.00	0.7	1.00	1.00	1.00	1.0
		ΔT	32	30	26	22	32	30	26	22	32	30	26	22	32	30	26	22	31	29	25	21	33	31	27	23
		kW	3.76	3.75	3.74	3.8	4.21	4.21	4.20	4.2	4.72	4.71	4.71	4.7	5.26	5.26	5.25	5.3	5.88	5.87	5.87	5.9	6.60	6.59	6.58	6.6
		Amps	14.2	14.2	14.1	14.3	16.3	16.3	16.2	16.4	18.6	18.6	18.5	18.7	21.1	21.1	21.0	21.2	23.9	23.9	23.9	24.0	27.2	27.2	27.1	27.3
		Hi PR	292	293	295	299.6	336	337	339	343.6	382	383	385	389.6	431	432	434	439.2	485	486	488	492.7	542	543	545	549.8
		Lo PR	138	140	143	148.6	146	148	151	156.2	153	154	158	162.9	158	160	163	168.6	164	166	169	174.1	171	173	176	181.1

IDB: Entering Indoor Dry Bulb Temperature

Shaded area reflects AHRI conditions

kW = Total system power

High and low pressures are measured at the liquid and suction service valves.

Amps = outdoor unit amps (comp.+fan)

ASXN3N1810A*/CA*FA2422*6A* Conditions: 80 °F IBD, 67 °F IWB @ 520 CFM				
Outdoor Tem. ° F.	Total BTU/h	Sensible BTU/h	Latent BTU/h	Total Watts
75	18,250	12,300	5,950	1,240
80	18,050	12,150	5,900	1,310
85	17,800	12,000	5,800	1,380
90	17,400	11,750	5,650	1,460
95	**17,000**	**11,450**	**5,550**	**1,530**
100	16,550	11,150	5,400	1,620
105	16,050	10,850	5,200	1,700
110	15,650	10,550	5,100	1,800
115	15,200	10,250	4,950	1,890
TVA Conditions @ 95° OD DB, 75° ID DB 63° ID WB				
95°	**16,400**	**11,500**	**4,900**	**1,530**

ASXN3N2410A*/CA*TA2422*4A* Conditions: 80 °F IBD, 67 °F IWB @ 800 CFM				
Outdoor Tem. ° F.	Total BTU/h	Sensible BTU/h	Latent BTU/h	Total Watts
75	24,250	16,550	7,700	1,660
80	23,950	16,350	7,600	1,750
85	23,650	16,100	7,550	1,840
90	23,150	15,750	7,400	1,940
95	**22,600**	**15,400**	**7,200**	**2,030**
100	22,000	15,000	7,000	2,140
105	21,350	14,550	6,800	2,250
110	20,800	14,150	6,650	2,380
115	20,200	13,750	6,450	2,510
TVA Conditions @ 95° OD DB, 75° ID DB 63° ID WB				
95°	**21,800**	**15,450**	**6,350**	**2,030**

ASXN3N3010A*/CA*FA3626*6A* Conditions: 80 °F IBD, 67 °F IWB @ 1105 CFM				
Outdoor Tem. ° F.	Total BTU/h	Sensible BTU/h	Latent BTU/h	Total Watts
75	30,450	22,000	8,450	2,110
80	29,950	21,000	8,950	2,230
85	29,400	20,000	9,400	2,340
90	28,900	20,250	8,650	2,470
95	**28,400**	**20,500**	**7,900**	**2,600**
100	27,600	19,950	7,650	2,750
105	26,800	19,350	7,450	2,890
110	26,100	18,850	7,250	3,060
115	25,350	18,300	7,050	3,220
TVA Conditions @ 95° OD DB, 75° ID DB 63° ID WB				
95°	**27,400**	**16,400**	**11,000**	**2,040**

ASXN3N3610A*/CA*FA4226*6A* Conditions: 80 °F IBD, 67 °F IWB @ 1270 CFM				
Outdoor Tem. ° F.	Total BTU/h	Sensible BTU/h	Latent BTU/h	Total Watts
75	36,650	27,250	9,400	2,480
80	36,200	26,900	9,300	2,630
85	35,750	26,550	9,200	2,770
90	35,000	26,000	9,000	2,930
95	**34,200**	**25,400**	**8,800**	**3,080**
100	33,250	24,700	8,550	3,250
105	32,300	24,000	8,300	3,420
110	31,450	23,350	8,100	3,630
115	30,550	22,700	7,850	3,830
TVA Conditions @ 95° OD DB, 75° ID DB 63° ID WB				
95°	**33,000**	**25,500**	**7,500**	**3,080**

ASXN3N4210A*/CA*F4961*6A* Conditions: 80 °F IBD, 67 °F IWB @ 1460 CFM				
Outdoor Tem. ° F.	Total Btuh	Sensible Btuh	Latent Btuh	Total Watts
75	42,350	30,950	11,400	2,860
80	41,850	30,600	11,250	3,030
85	41,300	30,200	11,100	3,190
90	40,400	29,550	10,850	3,370
95	**39,500**	**28,850**	**10,650**	**3,550**
100	38,400	28,050	10,350	3,760
105	37,300	27,250	10,050	3,960
110	36,300	26,500	9,800	4,200
115	35,300	25,750	9,550	4,430
TVA Conditions @ 95° OD DB, 75° ID DB 63° ID WB				
95°	**38,100**	**28,950**	**9,150**	**3,560**

ASXN3N4810A*/CA*F4961*6A* Conditions: 80 °F IBD, 67 °F IWB @ 1640 CFM				
Outdoor Tem. ° F.	Total Btuh	Sensible Btuh	Latent Btuh	Total Watts
75	48,250	36,100	12,150	3,330
80	47,650	35,700	11,950	3,520
85	47,050	35,250	11,800	3,710
90	46,050	34,500	11,550	3,920
95	**45,000**	**33,700**	**11,300**	**4,120**
100	43,750	32,750	11,000	4,350
105	42,500	31,800	10,700	4,580
110	41,350	30,950	10,400	4,850
115	40,200	30,100	10,100	5,120
TVA Conditions @ 95° OD DB, 75° ID DB 63° ID WB				
95°	**43,400**	**33,800**	**9,600**	**4,130**

ASXN3N6010A*/CA*T4961*4A* Conditions: 80 °F IBD, 67 °F IWB @ 1565 CFM				
Outdoor Tem. ° F.	Total Btuh	Sensible Btuh	Latent Btuh	Total Watts
75	57,900	39,500	18,400	4,130
80	57,200	39,050	18,150	4,390
85	56,450	38,550	17,900	4,640
90	55,250	37,700	17,550	4,910
95	**54,000**	**36,850**	**17,150**	**5,180**
100	52,500	35,850	16,650	5,490
105	51,000	34,800	16,200	5,800
110	49,650	33,850	15,800	6,160
115	48,250	32,900	15,350	6,510
TVA Conditions @ 95° OD DB, 75° ID DB 63° ID WB				
95°	**52,050**	**36,950**	**15,100**	**5,190**

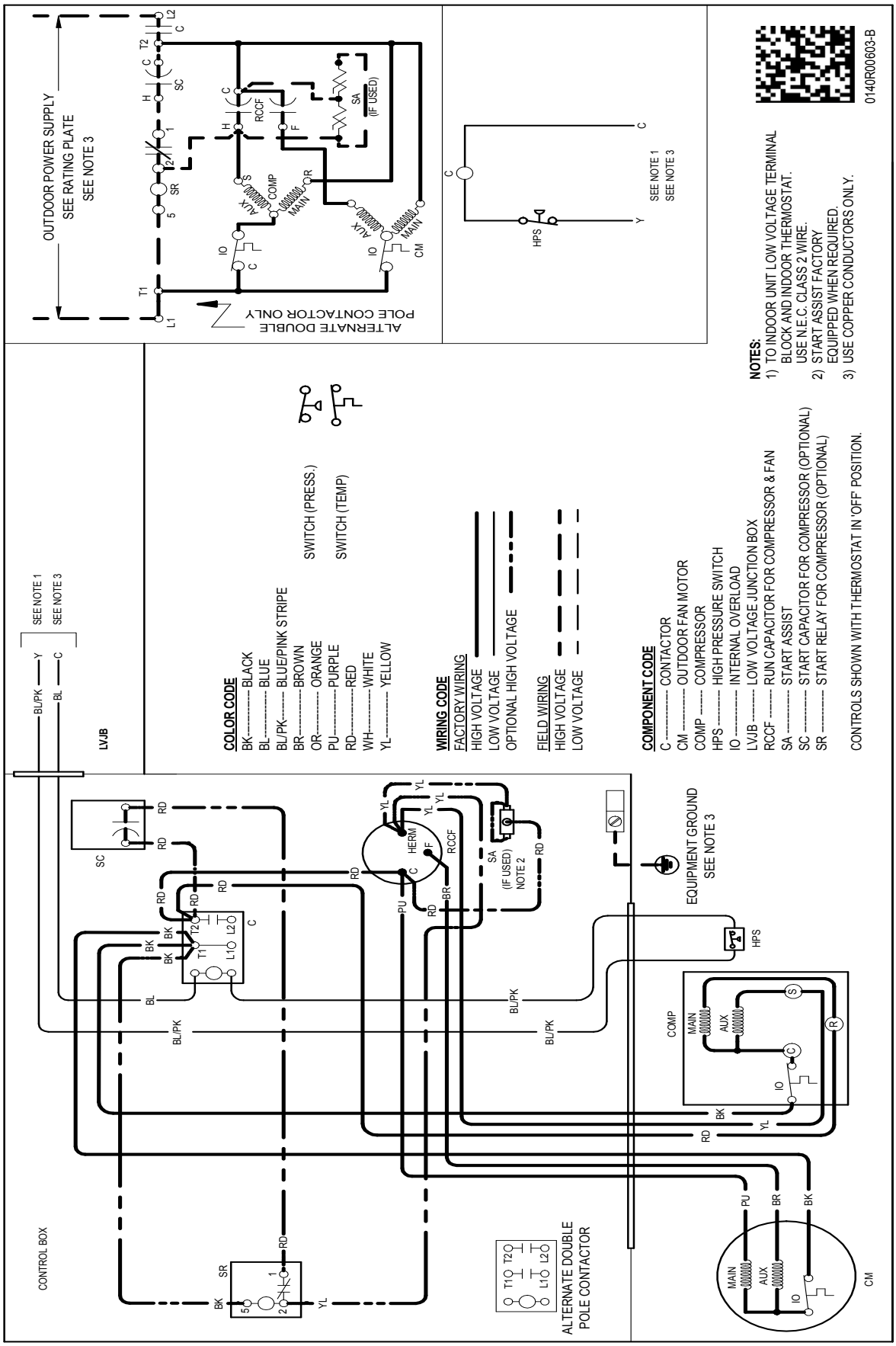

WARNING

High Voltage: Disconnect all power before servicing or installing this unit. Multiple power sources may be present. Failure to do so may cause property damage, personal injury, or death.

Wiring is subject to change. Always refer to the wiring diagram or the unit for the most up-to-date wiring.

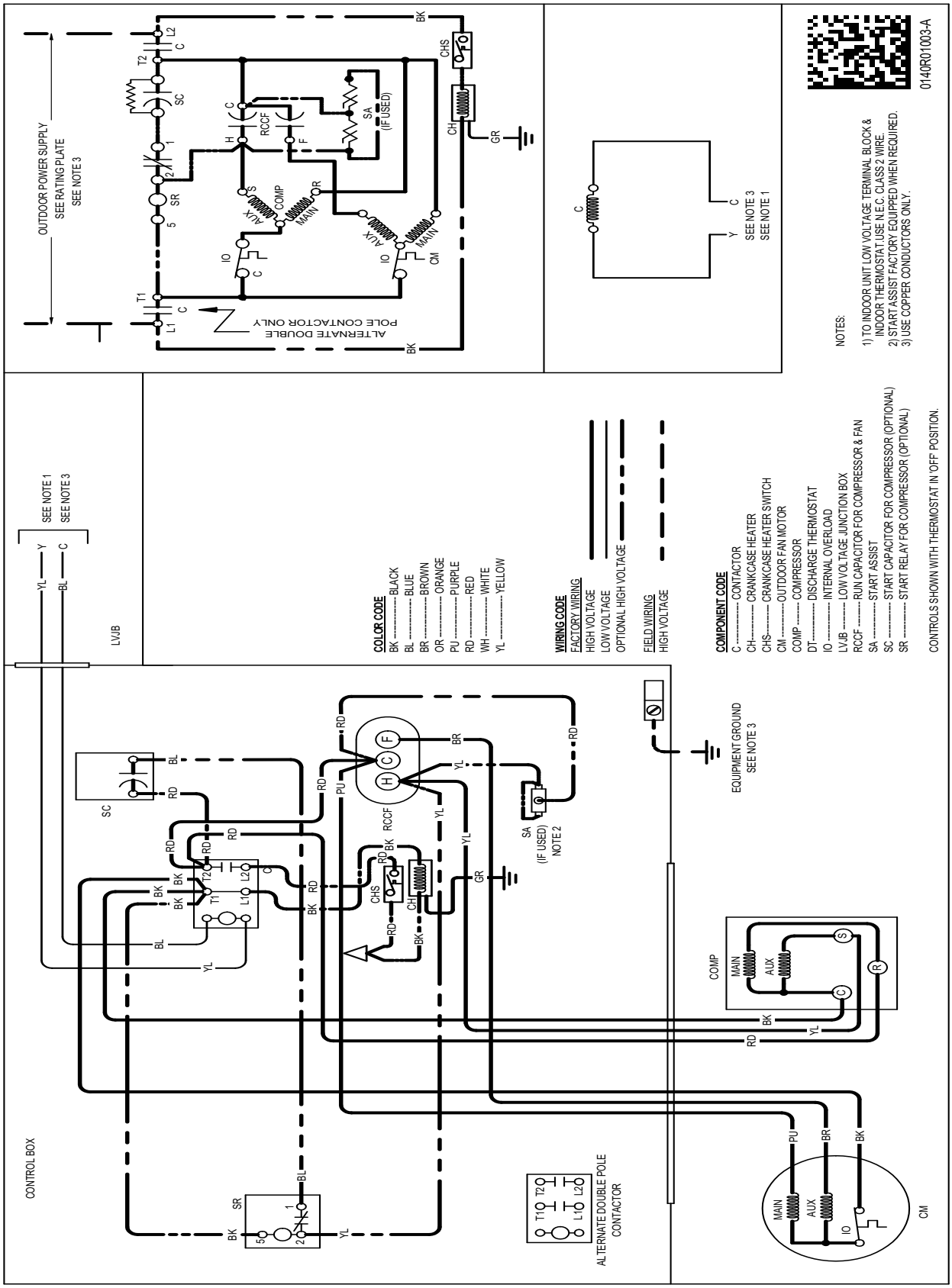

WARNING

High Voltage: Disconnect all power before servicing or installing this unit. Multiple power sources may be present. Failure to do so may cause property damage, personal injury, or death.

Wiring is subject to change. Always refer to the wiring diagram or the unit for the most up-to-date wiring.

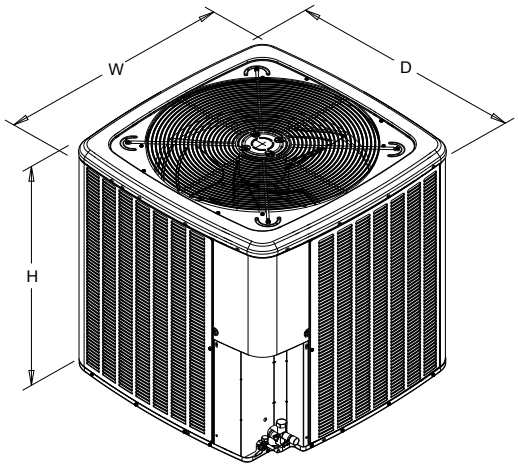

Model	Dimensions		
	W"	D"	H"
ASXN3N1810A*	26	26	27
ASXN3N2410A*	26	26	32½
ASXN3N3010A*	29	29	32½
ASXN3N3610A*	29	29	32½
ASXN3N4210A*	29	29	39½
ASXN3N4810A*	35½	35½	35¾
ASXN3N6010A*	35½	35½	39½

Accessories

Model	Description	ASXN3 N1810A*	ASXN3 N2410A*	ASXN3 N3010A*	ASXN3 N3610A*	ASXN3 N4210A*	ASXN3 N4810A*	ASXN3 N6010A*
ABK-20	Anchor Bracket Kit ^	X	X	X	X	X	X	X
ABK-21	Anchor Bracket Kit ^							
ASC-01	Anti-Short Cycle Kit	X	X	X	X	X	X	X
CSR-U-1	Hard-start Kit	X	X	X	X			
CSR-U-2	Hard-start Kit				X	X	X	X
CSR-U-3	Hard-start Kit						X	X
FSK01A[1]	Freeze Protection Kit	X	X	X	X	X	X	X
LSK02A[2]	Liquid Line Solenoid Kit	X	X	X	X	X	X	X
LAKT01	Low-Ambient Kit	X	X	X	X	X	X	
0130R00000S	Low-Pressure Switch Kit	X	X	X	X	X	X	X
TXV-FX-KX-2T [2]	TXV Kit	X	X					
TXV-FX-KX-3T [2]	TXV Kit			X	X			
TXV-FX-KX-5T [2]	TXV Kit					X	X	X

◊ Contains 20 brackets; four brackets needed to anchor unit to pad
[1] Installed on indoor coil
[2] Condensing units and heat pumps with reciprocating or rotary compressors require the use of start-assist components when used in conjunction with an indoor coil using a non-bleed thermal expansion valve refrigerant metering device or liquid line solenoid kit. The TXV should always be sized based on the tonnage of the outdoor unit.

All AHRI system ratings are accessible in the System Configurator tool via PartnerLink.

Amana® is a registered trademark of Maytag Corporation or its related companies and is used under license. All rights reserved.
Our continuing commitment to quality products may mean a change in specifications without notice.
©2022 ***DAIKIN COMFORT TECHNOLOGIES MANUFACTURING, L.P.*** • Houston, Texas • Printed in the USA.