Heating & Air Conditioning
Amana®
AMERICA'S BRAND FOR COMFORT™

ASX13

Cooling Capacity: 17,800 - 56,500 BTU/h

Energy-Efficient Split System Air Conditioner Up to 14 SEER / 12 EER

Contents

Nomenclature 2
Product Specifications 3
Expanded Cooling Data 4
AHRI Ratings 22
Dimensions 49
Wiring Diagrams 50
Accessories 52

Standard Features

- Energy-efficient scroll compressor
- High-density foam compressor sound blanket
- Copeland® ComfortAlert™ diagnostics
- Factory-installed filter drier
- Copper tube / enhanced aluminum fin coil
- Sweat connection service valves with easy access to gauge ports
- Contactor with lug connection
- Ground lug connection
- AHRI Certified; ETL Listed

Cabinet Features

- Heavy-gauge, galvanized-steel cabinet with sound control top design
- Attractive Architectural Gray powder-paint finish with 500-hour salt-spray approval
- Wire fan discharge grille
- Steel louver coil guard
- Compact footprint
- Top and side maintenance access
- Single-panel access to controls with space provided for field-installed accessories

10 YEAR PARTS LIMITED WARRANTY*

Intertek

COMPANY WITH QUALITY SYSTEM CERTIFIED BY DNV GL = ISO 9001 =

COMPANY WITH ENVIRONMENTAL SYSTEM CERTIFIED BY DNV GL = ISO 14001 =

* Complete warranty details available from your local dealer or at www.amana-hac.com. To receive the 10-Year Parts Limited Warranty, online registration must be completed within 60 days of installation. Online registration is not required in California or Québec.

Amana® is a trademark of Maytag Corporation or its related companies and used under license to Goodman Company, L.P., Houston, Texas.

A	S	X	13	036	1	AA
1	2	3	4,5	6,7,8	9	10,11

Brand

A Amana® Brand

Product Category

S Split System

N Nominal Split System

Unit Type

X Condenser R-410A

Z Heat Pump R-410A

Efficiency

13	13 SEER	16	16 SEER
14	14 SEER	18	18 SEER

Engineering *

Major/ Minor Revisions

* Not used for order or inventory control

Electrical

1 - 208/230 V, 1 Phase, 60 Hz

Nominal Capacity

018	1½ Tons	042	3½ Tons
024	2 Tons	048	4 Tons
030	2½ Tons	060	5 Tons
036	3 Tons		

	ASX13 0181D	ASX13 0241C	ASX13 0301C	ASX13 0361D	ASX13 0421C	ASX13 0481C	ASX13 0601C	ASX13 0611A*
CAPACITIES								
Nominal Cooling (BTU/h)	17,800	23,000	28,400	33,600	40,000	46,000	57,000	56,500
SEER / EER	13 / 11	13 / 11	13 / 11	13 / 11	13 / 11	13 / 11	13 / 11	13 / 11
Decibels	75	75	73	74	75	76	77	77
COMPRESSOR								
RLA	9.0	13.5	12.8	14.1	17.9	19.9	25.0	26.4
LRA	48	58.3	64	77	112	109	134	134
CONDENSER FAN MOTOR								
Horsepower	1/8	1/8	1/8	1/4	1/4	1/4	1/4	1/4
FLA	0.7	0.7	0.7	1.2	1.3	1.3	1.3	1.3
REFRIGERATION SYSTEM								
Refrigerant Line Size								
Liquid Line Size (“O.D.)	⅜"	⅜"	⅜"	⅜"	⅜"	⅜"	⅜"	⅜"
Suction Line Size (“O.D.)	¾"	¾"	¾"	⅞"	1⅛"	1⅛"	1⅛"	⅞"
Refrigerant Connection Size								
Liquid Valve Size (“O.D.)	⅜"	⅜"	⅜"	⅜"	⅜"	⅜"	⅜"	⅜"
Suction Valve Size (“O.D.) [3] [4]	¾"	¾"	¾"	¾" [4]	⅞" [5]	⅞" [5]	⅞" [5]	¾"
Valve Type	Sweat	Sweat	Sweat	Sweat	Sweat	Sweat	Sweat	Sweat
Refrigerant Charge	69	60	60	62	80	91	94	111
Shipped with Orifice Size	0.051	0.057	0.061	0.070	0.076	0.080	0.086	0.086
ELECTRICAL DATA								
Voltage / Phase (60 Hz)	208/230-1	208/230-1	208/230-1	208/230-1	208/230-1	208/230-1	208/230-1	208/230-1
Minimum Circuit Ampacity [1]	12	17.6	16.7	18.8	23.7	26.2	32.6	34.3
Max. Overcurrent Protection [2]	20	30	25	30	40	45	50	60
Min / Max Volts	197/253	197/253	197/253	197/253	197/253	197/253	197/253	197/253
Electrical Conduit Size	½" or ¾"	½" or ¾"	½" or ¾"	½" or ¾"	½" or ¾"	½" or ¾"	½" or ¾"	½" or ¾"
Equipment Weight (lbs)	102	115	115	118	171	175	184	211
Ship Weight (lbs)	117	128	132	135	189	193	202	233

[1] Line sizes denoted for 25’ line sets, tested and rated in accordance with AHRI Standard 210/240. For other line-set lengths or sizes, refer to the installation & Operating instructions and/or the long line-set guidelines.

[2] Wire size should be determined in accordance with National Electrical Codes; extensive wire runs will require larger wire sizes

[3] Must use time-delay fuses or HACR-type circuit breakers of the same size as noted.

[4] Installer will need to supply ¾” to ⅞” adapters for suction line connections.

[5] Installer will need to supply ⅞” to 1⅛” adapters for suction line connections.

NOTES

- Always check the S&R plate for electrical data on the unit being installed.
- Unit is charged with refrigerant for 15’ of ⅜” liquid line. System charge must be adjusted per Installation Instructions Final Charge Procedure.
- This product may not be installed in the Southeast (including Hawaii) or Southwest Regions as of Jan. 1, 2015.

			Outdoor Ambient Temperature																							
			65				75				85				95				105				115			
			Entering Indoor Wet Bulb Temperature																							
IDB	Airflow		59	63	67	71	59	63	67	71	59	63	67	71	59	63	67	71	59	63	67	71	59	63	67	71
70	525	MBh	15.8	16.4	17.9	-	15.4	16.0	17.5	-	15.1	15.6	17.1	-	14.7	15.2	16.7	-	14.0	14.5	15.9	-	12.9	13.4	14.7	-
		S/T	0.67	0.56	0.39	-	0.69	0.58	0.40	-	0.71	0.59	0.41	-	0.73	0.61	0.42	-	0.76	0.63	0.44	-	0.77	0.64	0.44	-
		ΔT	18	16	12	-	19	16	12	-	19	16	12	-	19	16	12	-	19	16	12	-	17	15	11	-
		kW	1.27	1.30	1.34	-	1.36	1.39	1.43	-	1.44	1.47	1.51	-	1.51	1.54	1.59	-	1.57	1.60	1.65	-	1.62	1.65	1.71	-
		Amps	4.6	4.7	4.8	-	4.9	5.0	5.2	-	5.3	5.5	5.6	-	5.7	5.8	6.0	-	6.0	6.2	6.4	-	6.4	6.6	6.8	-
		HI PR	203	218	230	-	228	245	259	-	259	279	294	-	295	317	335	-	332	357	377	-	366	394	416	-
		LO PR	103	109	119	-	109	116	126	-	113	120	131	-	119	126	138	-	124	132	144	-	129	137	149	-
	600	MBh	17.1	17.7	19.4	-	16.7	17.3	19.0	-	16.3	16.9	18.5	-	15.9	16.5	18.1	-	15.1	15.7	17.2	-	14.0	14.5	15.9	-
		S/T	0.69	0.58	0.40	-	0.72	0.60	0.41	-	0.74	0.61	0.43	-	0.76	0.63	0.44	-	0.79	0.66	0.46	-	0.79	0.66	0.46	-
		ΔT	18	16	12	-	18	16	12	-	18	16	12	-	19	16	12	-	18	16	12	-	17	15	11	-
		kW	1.30	1.33	1.37	-	1.39	1.42	1.46	-	1.48	1.51	1.55	-	1.55	1.58	1.63	-	1.61	1.64	1.69	-	1.66	1.70	1.75	-
		Amps	4.7	4.8	5.0	-	5.1	5.2	5.3	-	5.5	5.6	5.8	-	5.9	6.0	6.2	-	6.2	6.4	6.6	-	6.6	6.7	7.0	-
		HI PR	209	225	238	-	235	252	267	-	267	287	303	-	304	327	345	-	342	368	389	-	378	407	429	-
		LO PR	106	113	123	-	112	119	130	-	116	124	135	-	122	130	142	-	128	136	149	-	133	141	154	-
	675	MBh	17.6	18.3	20.0	-	17.2	17.9	19.6	-	16.8	17.4	19.1	-	16.4	17.0	18.6	-	15.6	16.2	17.7	-	14.4	15.0	16.4	-
		S/T	0.73	0.61	0.42	-	0.75	0.63	0.43	-	0.77	0.64	0.45	-	0.80	0.66	0.46	-	0.83	0.69	0.48	-	0.83	0.70	0.48	-
		ΔT	17	15	11	-	18	15	12	-	18	15	12	-	18	15	12	-	18	15	12	-	16	14	11	-
		kW	1.31	1.34	1.38	-	1.40	1.43	1.48	-	1.49	1.52	1.56	-	1.56	1.59	1.64	-	1.62	1.65	1.71	-	1.67	1.71	1.76	-
		Amps	4.7	4.8	5.0	-	5.1	5.2	5.4	-	5.5	5.7	5.8	-	5.9	6.0	6.2	-	6.3	6.4	6.6	-	6.6	6.8	7.0	-
		HI PR	211	227	240	-	237	255	269	-	270	290	306	-	307	330	349	-	345	372	392	-	382	411	434	-
		LO PR	107	114	124	-	113	120	131	-	118	125	137	-	123	131	143	-	129	138	150	-	134	142	155	-
75	525	MBh	16.1	16.5	17.9	19.2	15.7	16.2	17.5	18.8	15.3	15.8	17.1	18.3	15.0	**15.4**	16.7	17.9	14.2	14.6	15.8	17.0	13.2	13.5	14.7	15.7
		S/T	0.76	0.68	0.51	0.33	0.79	0.70	0.53	0.34	0.81	0.72	0.55	0.35	0.83	**0.74**	0.56	0.36	0.86	0.77	0.58	0.38	0.87	0.78	0.59	0.38
		ΔT	21	20	16	11	22	20	16	11	22	20	16	11	22	**20**	16	11	21	20	16	11	20	18	15	10
		kW	1.28	1.31	1.35	1.39	1.37	1.40	1.44	1.49	1.45	1.48	1.53	1.57	1.52	**1.55**	1.60	1.65	1.58	1.62	1.67	1.72	1.63	1.67	1.72	1.77
		Amps	4.6	4.7	4.9	5.0	5.0	5.1	5.2	5.4	5.4	5.5	5.7	5.9	5.7	**5.9**	6.1	6.3	6.1	6.3	6.5	6.7	6.5	6.6	6.8	7.1
		HI PR	205	220	233	243	230	247	261	272	261	281	297	310	298	**320**	338	353	335	361	381	397	370	398	421	439
		LO PR	104	111	121	128	110	117	127	136	114	121	132	141	120	**127**	139	148	126	134	146	155	130	138	151	161
	600	MBh	17.4	17.9	19.4	20.8	17.0	17.5	19.0	20.3	16.6	17.1	18.5	19.9	16.2	**16.7**	18.1	19.4	15.4	15.8	17.2	18.4	14.3	14.7	15.9	17.1
		S/T	0.79	0.70	0.53	0.34	0.81	0.73	0.55	0.35	0.84	0.75	0.57	0.36	0.86	**0.77**	0.58	0.38	0.90	0.80	0.61	0.39	0.90	0.81	0.61	0.39
		ΔT	21	19	16	11	21	20	16	11	21	20	16	11	21	**20**	16	11	21	19	16	11	20	18	15	10
		kW	1.31	1.34	1.38	1.42	1.40	1.43	1.48	1.52	1.49	1.52	1.56	1.61	1.56	**1.59**	1.64	1.69	1.62	1.65	1.71	1.76	1.67	1.71	1.76	1.82
		Amps	4.7	4.8	5.0	5.2	5.1	5.2	5.4	5.6	5.5	5.7	5.8	6.1	5.9	**6.0**	6.2	6.5	6.3	6.4	6.6	6.9	6.6	6.8	7.0	7.3
		HI PR	211	227	240	250	237	255	269	281	270	290	306	319	307	**330**	349	364	345	372	392	409	382	411	434	452
		LO PR	107	114	124	132	113	120	131	140	118	125	137	145	124	**131**	143	153	129	138	150	160	134	142	156	166
	675	MBh	17.9	18.5	20.0	21.5	17.5	18.0	19.5	21.0	17.1	17.6	19.1	20.5	16.7	**17.2**	18.6	20.0	15.9	16.3	17.7	19.0	14.7	15.1	16.4	17.6
		S/T	0.82	0.74	0.56	0.36	0.85	0.76	0.58	0.37	0.88	0.78	0.59	0.38	0.90	**0.81**	0.61	0.39	0.94	0.84	0.64	0.41	0.95	0.85	0.64	0.41
		ΔT	20	19	15	10	20	19	15	11	20	19	15	11	21	**19**	16	11	20	19	15	11	19	17	14	10
		kW	1.32	1.35	1.39	1.43	1.42	1.44	1.49	1.53	1.50	1.53	1.57	1.62	1.57	**1.60**	1.65	1.70	1.63	1.67	1.72	1.77	1.69	1.72	1.78	1.83
		Amps	4.8	4.9	5.0	5.2	5.1	5.3	5.4	5.6	5.6	5.7	5.9	6.1	6.0	**6.1**	6.3	6.5	6.3	6.5	6.7	6.9	6.7	6.9	7.1	7.4
		HI PR	213	230	242	253	239	258	272	284	272	293	309	323	310	**334**	352	368	349	375	396	413	385	415	438	457
		LO PR	108	115	126	134	114	122	133	141	119	126	138	147	125	**133**	145	154	131	139	152	162	135	144	157	167

IDB: Entering Indoor Dry Bulb Temperature

Shaded area reflects ACCA (TVA) conditions

Amps = outdoor unit amps (comp.+fan)

High and low pressures are measured at the liquid and suction service valves.

kW = Total system power

Expanded Cooling Data — ASX130181** (cont.)

			Outdoor Ambient Temperature																							
			65				75				85				95				105				115			
			Entering Indoor Wet Bulb Temperature																							
IDB	Airflow		59	63	67	71	59	63	67	71	59	63	67	71	59	63	67	71	59	63	67	71	59	63	67	71
80	525	MBh	16.4	16.7	17.9	19.1	16.0	16.3	17.4	18.6	15.6	15.9	17.0	18.2	15.2	15.6	16.6	17.8	14.5	14.8	15.8	16.9	13.4	13.7	14.6	15.6
		S/T	0.83	0.78	0.63	0.47	0.86	0.81	0.66	0.49	0.88	0.83	0.67	0.50	0.91	0.86	0.70	0.52	0.95	0.89	0.72	0.54	0.95	0.90	0.73	0.54
		ΔT	24	23	20	16	24	23	20	16	24	23	20	16	24	23	20	16	24	23	20	16	22	21	19	15
		kW	1.29	1.32	1.36	1.40	1.38	1.41	1.45	1.50	1.46	1.49	1.54	1.59	1.53	1.57	1.61	1.66	1.59	1.63	1.68	1.73	1.65	1.68	1.73	1.79
		Amps	4.6	4.8	4.9	5.1	5.0	5.1	5.3	5.5	5.4	5.6	5.7	6.0	5.8	5.9	6.1	6.4	6.2	6.3	6.5	6.8	6.5	6.7	6.9	7.2
		HI PR	207	223	235	245	232	250	264	275	264	284	300	313	301	324	342	357	338	364	385	401	374	402	425	443
		LO PR	105	112	122	130	111	118	129	137	115	123	134	143	121	129	141	150	127	135	147	157	131	140	152	162
	600	MBh	17.7	18.1	19.4	20.7	17.3	17.7	18.9	20.2	16.9	17.3	18.5	19.7	16.5	16.8	**18.0**	19.2	15.7	16.0	17.1	18.3	14.5	14.8	15.8	16.9
		S/T	0.86	0.81	0.66	0.49	0.89	0.84	0.68	0.51	0.92	0.86	0.70	0.52	0.95	0.89	**0.72**	0.54	0.98	0.92	0.75	0.56	0.99	0.93	0.76	0.56
		ΔT	23	22	20	16	24	23	20	16	24	23	20	16	24	23	**20**	16	24	23	20	16	22	21	18	15
		kW	1.32	1.35	1.39	1.43	1.42	1.44	1.49	1.53	1.50	1.53	1.58	1.62	1.57	1.60	**1.65**	1.71	1.63	1.67	1.72	1.77	1.69	1.72	1.78	1.83
		Amps	4.8	4.9	5.0	5.2	5.1	5.3	5.4	5.6	5.6	5.7	5.9	6.1	6.0	6.1	**6.3**	6.5	6.3	6.5	6.7	6.9	6.7	6.9	7.1	7.4
		HI PR	213	230	242	253	239	258	272	284	272	293	309	323	310	334	**352**	368	349	375	396	413	385	415	438	457
		LO PR	108	115	126	134	114	122	133	141	119	126	138	147	125	133	**145**	154	131	139	152	162	135	144	157	167
	675	MBh	18.3	18.7	19.9	21.3	17.8	18.2	19.5	20.8	17.4	17.8	19.0	20.3	17.0	17.4	18.5	19.8	16.1	16.5	17.6	18.8	14.9	15.3	16.3	17.4
		S/T	0.90	0.85	0.69	0.52	0.94	0.88	0.72	0.53	0.96	0.90	0.73	0.55	1.00	0.93	0.76	0.57	1.00	0.97	0.79	0.59	1.00	1.00	0.79	0.59
		ΔT	22	22	19	15	23	22	19	15	23	22	19	15	23	22	19	15	22	22	19	15	20	21	18	14
		kW	1.33	1.36	1.40	1.44	1.43	1.45	1.50	1.54	1.51	1.54	1.59	1.64	1.58	1.62	1.67	1.72	1.65	1.68	1.73	1.79	1.70	1.74	1.79	1.85
		Amps	4.8	4.9	5.1	5.3	5.2	5.3	5.5	5.7	5.6	5.8	6.0	6.2	6.0	6.2	6.4	6.6	6.4	6.5	6.8	7.0	6.8	6.9	7.2	7.4
		HI PR	215	232	245	255	242	260	275	287	275	296	313	326	313	337	356	371	352	379	400	418	389	419	442	461
		LO PR	109	116	127	135	115	123	134	143	120	128	139	148	126	134	146	156	132	140	153	163	137	145	159	169
85	525	MBh	16.6	17.0	17.8	19.0	16.3	16.6	17.4	18.5	15.9	16.2	16.9	18.1	15.5	15.8	16.5	17.6	14.7	15.0	15.7	16.8	13.6	13.9	14.5	15.5
		S/T	0.87	0.84	0.76	0.62	0.90	0.87	0.79	0.64	0.93	0.89	0.81	0.65	0.96	0.92	0.83	0.68	0.99	0.96	0.86	0.70	1.00	0.97	0.87	0.71
		ΔT	25	25	24	20	26	25	24	21	26	25	24	21	26	26	24	21	26	25	24	21	24	23	22	19
		kW	1.30	1.33	1.37	1.41	1.39	1.42	1.46	1.51	1.47	1.50	1.55	1.60	1.55	1.58	1.63	1.68	1.61	1.64	1.69	1.75	1.66	1.69	1.75	1.80
		Amps	4.7	4.8	5.0	5.1	5.1	5.2	5.3	5.5	5.5	5.6	5.8	6.0	5.8	6.0	6.2	6.4	6.2	6.4	6.6	6.8	6.6	6.7	7.0	7.2
		HI PR	209	225	238	248	235	252	267	278	267	287	303	316	304	327	345	360	342	368	388	405	378	406	429	448
		LO PR	106	113	123	131	112	119	130	138	116	124	135	144	122	130	142	151	128	136	149	158	132	141	154	164
	600	MBh	18.0	18.4	19.3	20.5	17.6	18.0	18.8	20.1	17.2	17.5	18.4	19.6	16.8	17.1	17.9	19.1	15.9	16.2	17.0	18.2	14.8	15.0	15.8	16.8
		S/T	0.90	0.87	0.79	0.64	0.94	0.90	0.82	0.66	0.96	0.93	0.84	0.68	0.99	0.96	0.86	0.70	1.00	0.99	0.90	0.73	1.00	1.00	0.90	0.73
		ΔT	25	25	23	20	25	25	24	20	25	25	24	20	25	25	24	21	24	25	23	20	23	23	22	19
		kW	1.33	1.36	1.40	1.44	1.43	1.45	1.50	1.54	1.51	1.54	1.59	1.64	1.58	1.62	1.67	1.72	1.65	1.68	1.73	1.79	1.70	1.74	1.79	1.85
		Amps	4.8	4.9	5.1	5.3	5.2	5.3	5.5	5.7	5.6	5.8	6.0	6.2	6.0	6.2	6.4	6.6	6.4	6.5	6.8	7.0	6.8	6.9	7.2	7.4
		HI PR	215	232	245	255	242	260	275	287	275	296	313	326	313	337	356	371	352	379	400	418	389	419	442	461
		LO PR	109	116	127	135	115	123	134	143	120	128	139	148	126	134	146	156	132	140	153	163	137	145	159	169
	675	MBh	18.6	18.9	19.8	21.2	18.1	18.5	19.4	20.7	17.7	18.1	18.9	20.2	17.3	17.6	18.4	19.7	16.4	16.7	17.5	18.7	15.2	15.5	16.2	17.3
		S/T	0.95	0.91	0.83	0.67	0.98	0.95	0.86	0.69	1.00	0.97	0.88	0.71	1.00	1.00	0.91	0.73	1.00	1.00	0.94	0.76	1.00	1.00	0.95	0.77
		ΔT	24	24	22	19	24	24	23	20	24	24	23	20	24	24	23	20	22	23	22	19	21	21	21	18
		kW	1.34	1.37	1.41	1.45	1.44	1.47	1.51	1.56	1.52	1.55	1.60	1.65	1.60	1.63	1.68	1.73	1.66	1.69	1.75	1.80	1.71	1.75	1.81	1.86
		Amps	4.9	5.0	5.1	5.3	5.2	5.4	5.5	5.7	5.7	5.8	6.0	6.2	6.1	6.2	6.4	6.7	6.4	6.6	6.8	7.1	6.8	7.0	7.2	7.5
		HI PR	218	234	247	258	244	263	278	289	278	299	316	329	316	340	359	375	356	383	404	422	393	423	447	466
		LO PR	110	117	128	136	117	124	135	144	121	129	141	150	127	135	148	157	133	142	155	165	138	147	160	171

IDB: Entering Indoor Dry Bulb Temperature

High and low pressures are measured at the liquid and suction service valves.

Shaded area reflects AHRI conditions

Amps = outdoor unit amps (comp.+fan)

kW = Total system power

			Outdoor Ambient Temperature																							
			65				75				85				95				105				115			
			Entering Indoor Wet Bulb Temperature																							
IDB	Airflow		59	63	67	71	59	63	67	71	59	63	67	71	59	63	67	71	59	63	67	71	59	63	67	71
70	700	MBh	21.1	21.8	23.9	-	20.6	21.3	23.4	-	20.1	20.8	22.8	-	19.6	20.3	22.3	-	18.6	19.3	21.1	-	17.3	17.9	19.6	-
		S/T	0.67	0.56	0.39	-	0.70	0.58	0.40	-	0.72	0.60	0.41	-	0.74	0.62	0.43	-	0.77	0.64	0.44	-	0.77	0.65	0.45	-
		ΔT	19	16	12	-	19	16	12	-	19	16	12	-	19	16	13	-	19	16	12	-	18	15	12	-
		kW	1.68	1.70	1.74	-	1.77	1.79	1.83	-	1.84	1.87	1.92	-	1.91	1.94	1.99	-	1.97	2.01	2.05	-	2.02	2.06	2.11	-
		Amps	5.7	5.8	6.0	-	6.1	6.3	6.5	-	6.7	6.8	7.1	-	7.1	7.3	7.5	-	7.6	7.8	8.0	-	8.0	8.2	8.5	-
		HI PR	209	225	237	-	234	252	266	-	267	287	303	-	304	327	345	-	342	368	388	-	377	406	429	-
		LO PR	100	107	116	-	106	113	123	-	110	117	128	-	116	123	134	-	121	129	141	-	125	133	146	-
	800	MBh	22.8	23.7	25.9	-	22.3	23.1	25.3	-	21.8	22.6	24.7	-	21.2	22.0	24.1	-	20.2	20.9	22.9	-	18.7	19.4	21.2	-
		S/T	0.70	0.58	0.40	-	0.72	0.61	0.42	-	0.74	0.62	0.43	-	0.77	0.64	0.44	-	0.80	0.66	0.46	-	0.80	0.67	0.46	-
		ΔT	18	16	12	-	19	16	12	-	19	16	12	-	19	16	12	-	18	16	12	-	17	15	11	-
		kW	1.71	1.73	1.77	-	1.80	1.82	1.87	-	1.88	1.91	1.95	-	1.95	1.98	2.03	-	2.01	2.04	2.09	-	2.06	2.10	2.15	-
		Amps	5.8	6.0	6.2	-	6.3	6.5	6.7	-	6.9	7.0	7.3	-	7.3	7.5	7.8	-	7.8	8.0	8.3	-	8.3	8.5	8.7	-
		HI PR	215	232	245	-	242	260	275	-	275	296	312	-	313	337	356	-	352	379	400	-	389	419	442	-
		LO PR	103	110	120	-	109	116	127	-	114	121	132	-	119	127	138	-	125	133	145	-	129	137	150	-
	900	MBh	23.5	24.4	26.7	-	23.0	23.8	26.1	-	22.4	23.2	25.5	-	21.9	22.7	24.8	-	20.8	21.5	23.6	-	19.3	20.0	21.9	-
		S/T	0.73	0.61	0.42	-	0.76	0.63	0.44	-	0.78	0.65	0.45	-	0.80	0.67	0.47	-	0.83	0.70	0.48	-	0.84	0.70	0.49	-
		ΔT	18	15	12	-	18	15	12	-	18	15	12	-	18	16	12	-	18	15	12	-	17	14	11	-
		kW	1.71	1.74	1.78	-	1.81	1.84	1.88	-	1.89	1.92	1.97	-	1.96	1.99	2.04	-	2.02	2.06	2.11	-	2.08	2.11	2.16	-
		Amps	5.9	6.0	6.2	-	6.4	6.5	6.7	-	6.9	7.1	7.3	-	7.4	7.6	7.8	-	7.9	8.1	8.3	-	8.3	8.5	8.8	-
		HI PR	217	234	247	-	244	263	277	-	278	299	315	-	316	340	359	-	356	383	404	-	393	423	446	-
		LO PR	104	111	121	-	110	117	128	-	115	122	133	-	120	128	140	-	126	134	147	-	131	139	152	-
75	700	MBh	21.4	22.1	23.9	25.6	20.9	21.6	23.3	25.0	20.4	21.0	22.8	24.4	19.9	**20.5**	22.2	23.8	18.9	19.5	21.1	22.7	17.5	18.1	19.6	21.0
		S/T	0.77	0.69	0.52	0.33	0.79	0.71	0.54	0.35	0.81	0.73	0.55	0.35	0.84	**0.75**	0.57	0.37	0.87	0.78	0.59	0.38	0.88	0.79	0.60	0.38
		ΔT	22	20	16	11	22	20	16	11	22	20	16	11	22	**20**	17	11	22	20	16	11	20	19	15	11
		kW	1.69	1.71	1.75	1.79	1.78	1.80	1.84	1.89	1.86	1.88	1.93	1.98	1.93	**1.96**	2.00	2.05	1.99	2.02	2.07	2.12	2.04	2.07	2.12	2.18
		Amps	5.7	5.9	6.1	6.3	6.2	6.3	6.6	6.8	6.7	6.9	7.1	7.4	7.2	**7.4**	7.6	7.9	7.7	7.8	8.1	8.4	8.1	8.3	8.6	8.9
		HI PR	211	227	240	250	237	255	269	281	269	290	306	319	307	**330**	348	363	345	371	392	409	381	410	433	452
		LO PR	101	108	118	125	107	114	124	132	111	118	129	138	117	**124**	136	145	122	130	142	151	127	135	147	157
	800	MBh	23.2	23.9	25.9	27.8	22.7	23.4	25.3	27.1	22.1	22.8	24.7	26.5	21.6	**22.2**	24.1	25.8	20.5	21.1	22.9	24.5	19.0	19.6	21.2	22.7
		S/T	0.79	0.71	0.54	0.35	0.82	0.74	0.56	0.36	0.84	0.76	0.57	0.37	0.87	**0.78**	0.59	0.38	0.90	0.81	0.61	0.39	0.91	0.82	0.62	0.40
		ΔT	21	20	16	11	21	20	16	11	21	20	16	11	22	**20**	16	11	21	20	16	11	20	18	15	10
		kW	1.71	1.74	1.78	1.82	1.81	1.84	1.88	1.92	1.89	1.92	1.97	2.01	1.96	**1.99**	2.04	2.09	2.02	2.06	2.11	2.16	2.08	2.11	2.17	2.22
		Amps	5.9	6.0	6.2	6.5	6.4	6.5	6.7	7.0	6.9	7.1	7.3	7.6	7.4	**7.6**	7.8	8.1	7.9	8.1	8.3	8.6	8.3	8.5	8.8	9.2
		HI PR	218	234	247	258	244	263	277	289	278	299	315	329	316	**340**	359	375	356	383	404	422	393	423	447	466
		LO PR	104	111	121	129	110	117	128	136	115	122	133	142	120	**128**	140	149	126	134	147	156	131	139	152	161
	900	MBh	23.9	24.6	26.7	28.6	23.4	24.1	26.0	27.9	22.8	23.5	25.4	27.3	22.2	**22.9**	24.8	26.6	21.1	21.8	23.6	25.3	19.6	20.2	21.8	23.4
		S/T	0.83	0.75	0.56	0.36	0.86	0.77	0.58	0.38	0.89	0.79	0.60	0.39	0.91	**0.82**	0.62	0.40	0.95	0.85	0.64	0.41	0.96	0.86	0.65	0.42
		ΔT	20	19	15	11	21	19	16	11	21	19	16	11	21	**19**	16	11	20	19	15	11	19	18	14	10
		kW	1.72	1.75	1.79	1.83	1.82	1.85	1.89	1.93	1.90	1.93	1.98	2.03	1.97	**2.01**	2.06	2.11	2.04	2.07	2.12	2.18	2.09	2.13	2.18	2.24
		Amps	5.9	6.1	6.3	6.5	6.4	6.6	6.8	7.1	7.0	7.2	7.4	7.7	7.5	**7.6**	7.9	8.2	7.9	8.1	8.4	8.7	8.4	8.6	8.9	9.3
		HI PR	220	236	250	260	247	265	280	292	280	302	319	332	319	**344**	363	378	359	387	408	426	397	427	451	470
		LO PR	105	112	122	130	111	119	129	138	116	123	135	143	122	**129**	141	150	127	136	148	158	132	140	153	163

IDB: Entering Indoor Dry Bulb Temperature

Shaded area reflects ACCA (TVA) conditions

Amps = outdoor unit amps (comp.+fan)

High and low pressures are measured at the liquid and suction service valves.

kW = Total system power

Expanded Cooling Data — ASX130241** (cont.)

			Outdoor Ambient Temperature																							
			65				75				85				95				105				115			
			Entering Indoor Wet Bulb Temperature																							
IDB	Airflow		59	63	67	71	59	63	67	71	59	63	67	71	59	63	67	71	59	63	67	71	59	63	67	71
80	700	MBh	21.8	22.3	23.8	25.5	21.3	21.8	23.3	24.9	20.8	21.3	22.7	24.3	20.3	20.7	22.2	23.7	19.3	19.7	21.0	22.5	17.9	18.2	19.5	20.8
		S/T	0.84	0.79	0.64	0.48	0.87	0.82	0.67	0.50	0.89	0.84	0.68	0.51	0.92	0.86	0.70	0.53	0.96	0.90	0.73	0.55	0.97	0.91	0.74	0.55
		ΔT	24	23	20	16	24	23	20	16	24	23	20	16	25	24	20	16	24	23	20	16	23	22	19	15
		kW	1.70	1.72	1.76	1.80	1.79	1.81	1.86	1.90	1.87	1.90	1.94	1.99	1.94	1.97	2.02	2.07	2.00	2.03	2.08	2.13	2.05	2.08	2.14	2.19
		Amps	5.8	5.9	6.1	6.3	6.3	6.4	6.6	6.9	6.8	7.0	7.2	7.5	7.3	7.4	7.7	8.0	7.7	7.9	8.2	8.5	8.2	8.4	8.7	9.0
		HI PR	213	229	242	253	239	257	272	283	272	293	309	322	310	333	352	367	348	375	396	413	385	414	438	456
		LO PR	102	109	119	127	108	115	126	134	112	120	130	139	118	126	137	146	124	132	144	153	128	136	149	158
	800	MBh	23.6	24.1	25.8	27.6	23.1	23.6	25.2	26.9	22.5	23.0	24.6	26.3	22.0	22.5	**24.0**	25.7	20.9	21.3	22.8	24.4	19.3	19.8	21.1	22.6
		S/T	0.87	0.82	0.67	0.50	0.90	0.85	0.69	0.52	0.93	0.87	0.71	0.53	0.96	0.90	**0.73**	0.55	0.99	0.93	0.76	0.57	1.00	0.94	0.76	0.57
		ΔT	24	23	20	16	24	23	20	16	24	23	20	16	24	23	**20**	16	24	23	20	16	22	21	19	15
		kW	1.72	1.75	1.79	1.83	1.82	1.85	1.89	1.93	1.90	1.93	1.98	2.03	1.97	2.01	**2.06**	2.11	2.04	2.07	2.12	2.18	2.09	2.13	2.18	2.24
		Amps	5.9	6.1	6.3	6.5	6.4	6.6	6.8	7.1	7.0	7.2	7.4	7.7	7.5	7.6	**7.9**	8.2	7.9	8.1	8.4	8.7	8.4	8.6	8.9	9.3
		HI PR	220	236	250	260	247	265	280	292	280	302	319	332	319	344	**363**	379	359	387	408	426	397	427	451	470
		LO PR	105	112	123	130	111	119	129	138	116	123	135	143	122	129	**141**	150	127	136	148	158	132	140	153	163
	900	MBh	24.3	24.9	26.6	28.4	23.8	24.3	26.0	27.7	23.2	23.7	25.3	27.1	22.6	23.1	24.7	26.4	21.5	22.0	23.5	25.1	19.9	20.4	21.8	23.3
		S/T	0.91	0.86	0.70	0.52	0.95	0.89	0.72	0.54	1.00	0.91	0.74	0.55	1.00	0.94	0.77	0.57	1.00	1.00	0.79	0.59	1.00	1.00	0.80	0.60
		ΔT	23	22	19	15	23	22	19	15	24	22	19	15	23	22	19	15	22	22	19	15	20	21	18	14
		kW	1.73	1.76	1.80	1.84	1.83	1.86	1.90	1.95	1.91	1.94	1.99	2.04	1.99	2.02	2.07	2.12	2.05	2.08	2.14	2.19	2.10	2.14	2.19	2.25
		Amps	6.0	6.1	6.3	6.6	6.5	6.6	6.9	7.1	7.0	7.2	7.5	7.7	7.5	7.7	8.0	8.3	8.0	8.2	8.5	8.8	8.5	8.7	9.0	9.3
		HI PR	222	239	252	263	249	268	283	295	283	305	322	336	323	347	367	382	363	390	412	430	401	431	456	475
		LO PR	107	113	124	132	113	120	131	139	117	124	136	145	123	131	143	152	129	137	150	159	133	142	155	165
85	700	MBh	22.2	22.6	23.7	25.3	21.7	22.1	23.1	24.7	21.2	21.6	22.6	24.1	20.6	21.0	22.0	23.5	19.6	20.0	20.9	22.3	18.2	18.5	19.4	20.7
		S/T	0.88	0.85	0.77	0.62	0.91	0.88	0.80	0.65	0.94	0.90	0.82	0.66	0.97	0.93	0.84	0.68	1.00	0.97	0.87	0.71	1.00	0.98	0.88	0.71
		ΔT	26	25	24	21	26	26	24	21	26	26	24	21	26	26	24	21	26	25	24	21	24	24	22	19
		kW	1.70	1.73	1.77	1.81	1.80	1.82	1.87	1.91	1.88	1.91	1.95	2.00	1.95	1.98	2.03	2.08	2.01	2.04	2.09	2.15	2.06	2.10	2.15	2.21
		Amps	5.8	6.0	6.2	6.4	6.3	6.5	6.7	6.9	6.9	7.0	7.3	7.5	7.3	7.5	7.8	8.0	7.8	8.0	8.3	8.6	8.3	8.5	8.7	9.1
		HI PR	215	232	245	255	242	260	274	286	275	296	312	326	313	337	356	371	352	379	400	417	389	419	442	461
		LO PR	103	110	120	128	109	116	127	135	113	121	132	140	119	127	138	147	125	133	145	155	129	137	150	160
	800	MBh	24.0	24.5	25.7	27.4	23.5	23.9	25.1	26.8	22.9	23.4	24.5	26.1	22.4	22.8	23.9	25.5	21.2	21.7	22.7	24.2	19.7	20.1	21.0	22.4
		S/T	0.91	0.88	0.80	0.65	0.95	0.91	0.82	0.67	0.97	0.94	0.85	0.69	1.00	0.97	0.87	0.71	1.00	1.00	0.91	0.74	1.00	1.00	0.91	0.74
		ΔT	25	25	23	20	26	25	24	21	26	25	24	21	26	25	24	21	24	25	24	20	23	23	22	19
		kW	1.73	1.76	1.80	1.84	1.83	1.86	1.90	1.95	1.91	1.94	1.99	2.04	1.99	2.02	2.07	2.12	2.05	2.08	2.14	2.19	2.10	2.14	2.19	2.25
		Amps	6.0	6.1	6.3	6.6	6.5	6.6	6.9	7.1	7.0	7.2	7.5	7.7	7.5	7.7	8.0	8.3	8.0	8.2	8.5	8.8	8.5	8.7	9.0	9.3
		HI PR	222	239	252	263	249	268	283	295	283	305	322	336	323	347	367	382	363	390	412	430	401	431	456	475
		LO PR	107	113	124	132	113	120	131	139	117	124	136	145	123	131	143	152	129	137	150	159	133	142	155	165
	900	MBh	24.8	25.2	26.4	28.2	24.2	24.7	25.8	27.6	23.6	24.1	25.2	26.9	23.0	23.5	24.6	26.2	21.9	22.3	23.4	24.9	20.3	20.7	21.6	23.1
		S/T	0.96	0.92	0.83	0.68	0.99	0.96	0.86	0.70	1.00	0.98	0.89	0.72	1.00	1.00	0.92	0.74	1.00	1.00	0.95	0.77	1.00	1.00	0.96	0.78
		ΔT	24	24	23	20	25	24	23	20	24	24	23	20	24	24	23	20	22	23	23	20	21	21	21	18
		kW	1.74	1.77	1.81	1.85	1.84	1.87	1.91	1.96	1.92	1.96	2.00	2.05	2.00	2.03	2.08	2.14	2.06	2.10	2.15	2.21	2.12	2.15	2.21	2.27
		Amps	6.1	6.2	6.4	6.6	6.5	6.7	6.9	7.2	7.1	7.3	7.5	7.8	7.6	7.8	8.0	8.4	8.1	8.3	8.6	8.9	8.6	8.8	9.1	9.4
		HI PR	224	241	255	266	251	271	286	298	286	308	325	339	326	351	370	386	366	394	416	434	405	436	460	480
		LO PR	108	114	125	133	114	121	132	141	118	126	137	146	124	132	144	154	130	138	151	161	135	143	156	166

IDB: Entering Indoor Dry Bulb Temperature

High and low pressures are measured at the liquid and suction service valves.

Shaded area reflects AHRI conditions

Amps = outdoor unit amps (comp.+fan)

kW = Total system power

Expanded Expanded Cooling Data — ASX130301**

			Outdoor Ambient Temperature																							
			65				75				85				95				105				115			
			Entering Indoor Wet Bulb Temperature																							
IDB	Airflow		59	63	67	71	59	63	67	71	59	63	67	71	59	63	67	71	59	63	67	71	59	63	67	71
70	1181	MBh	24.9	25.8	28.3	-	24.4	25.2	27.7	-	23.8	24.6	27.0	-	23.2	24.0	26.3	-	22.0	22.8	25.0	-	20.4	21.2	23.2	-
		S/T	0.69	0.58	0.40	-	0.72	0.60	0.42	-	0.74	0.61	0.43	-	0.76	0.63	0.44	-	0.79	0.66	0.46	-	0.80	0.66	0.46	-
		ΔT	18	16	12	-	18	16	12	-	18	16	12	-	19	16	12	-	18	16	12	-	17	15	11	-
		kW	1.94	1.98	2.03	-	2.08	2.12	2.18	-	2.20	2.25	2.32	-	2.31	2.36	2.43	-	2.40	2.45	2.53	-	2.48	2.54	2.62	-
		Amps	6.8	7.0	7.2	-	7.4	7.6	7.8	-	8.0	8.2	8.5	-	8.6	8.8	9.1	-	9.1	9.3	9.7	-	9.7	9.9	10.2	-
		HI PR	228	245	259	-	256	275	291	-	291	313	331	-	332	357	377	-	373	401	424	-	412	443	468	-
		LO PR	102	109	119	-	108	115	125	-	112	119	130	-	118	125	137	-	124	131	143	-	128	136	148	-
	1050	MBh	27.0	28.0	30.7	-	26.4	27.4	30.0	-	25.8	26.7	29.3	-	25.1	26.1	28.5	-	23.9	24.7	27.1	-	22.1	22.9	25.1	-
		S/T	0.72	0.60	0.42	-	0.74	0.62	0.43	-	0.76	0.64	0.44	-	0.79	0.66	0.46	-	0.82	0.68	0.47	-	0.82	0.69	0.48	-
		ΔT	18	15	12	-	18	16	12	-	18	16	12	-	18	16	12	-	18	16	12	-	17	15	11	-
		kW	1.98	2.02	2.08	-	2.13	2.17	2.24	-	2.25	2.30	2.37	-	2.37	2.42	2.49	-	2.46	2.51	2.59	-	2.54	2.60	2.68	-
		Amps	7.0	7.2	7.4	-	7.6	7.8	8.0	-	8.2	8.4	8.7	-	8.8	9.0	9.3	-	9.4	9.6	9.9	-	9.9	10.2	10.5	-
		HI PR	235	253	267	-	264	284	300	-	300	323	341	-	342	368	388	-	384	414	437	-	425	457	483	-
		LO PR	105	112	122	-	111	118	129	-	116	123	134	-	122	129	141	-	127	135	148	-	132	140	153	-
	919	MBh	27.8	28.8	31.6	-	27.2	28.2	30.9	-	26.5	27.5	30.1	-	25.9	26.8	29.4	-	24.6	25.5	27.9	-	22.8	23.6	25.9	-
		S/T	0.75	0.63	0.44	-	0.78	0.65	0.45	-	0.80	0.67	0.46	-	0.83	0.69	0.48	-	0.86	0.72	0.50	-	0.86	0.72	0.50	-
		ΔT	17	15	11	-	17	15	11	-	17	15	11	-	17	15	11	-	17	15	11	-	16	14	11	-
		kW	2.00	2.04	2.10	-	2.14	2.19	2.25	-	2.27	2.32	2.39	-	2.39	2.44	2.51	-	2.48	2.53	2.62	-	2.56	2.62	2.70	-
		Amps	7.1	7.2	7.5	-	7.7	7.8	8.1	-	8.3	8.5	8.8	-	8.9	9.1	9.4	-	9.5	9.7	10.0	-	10.0	10.3	10.6	-
		HI PR	237	256	270	-	266	287	303	-	303	326	344	-	345	371	392	-	388	418	441	-	429	462	488	-
		LO PR	106	113	124	-	112	120	131	-	117	124	136	-	123	131	143	-	129	137	149	-	133	142	155	-
75	1181	MBh	25.4	26.1	28.3	30.3	24.8	25.5	27.6	29.6	24.2	24.9	26.9	28.9	23.6	**24.3**	26.3	28.2	22.4	23.1	25.0	26.8	20.8	21.4	23.1	24.8
		S/T	0.79	0.70	0.53	0.34	0.82	0.73	0.55	0.36	0.84	0.75	0.57	0.36	0.86	**0.77**	0.58	0.38	0.90	0.80	0.61	0.39	0.90	0.81	0.61	0.39
		ΔT	21	19	16	11	21	20	16	11	21	20	16	11	21	**20**	16	11	21	19	16	11	20	18	15	10
		kW	1.95	1.99	2.05	2.11	2.09	2.14	2.20	2.27	2.22	2.26	2.33	2.41	2.33	**2.38**	2.45	2.53	2.42	2.47	2.55	2.63	2.50	2.56	2.64	2.72
		Amps	6.9	7.1	7.3	7.6	7.4	7.6	7.9	8.2	8.1	8.3	8.6	8.9	8.6	**8.9**	9.2	9.5	9.2	9.4	9.7	10.1	9.7	10.0	10.3	10.7
		HI PR	230	248	262	273	259	278	294	306	294	316	334	349	335	**360**	381	397	377	405	428	447	416	448	473	493
		LO PR	103	110	120	128	109	116	127	135	113	121	132	140	119	**127**	138	147	125	133	145	154	129	137	150	160
	1050	MBh	27.5	28.3	30.6	32.9	26.8	27.6	29.9	32.1	26.2	27.0	29.2	31.3	25.6	**26.3**	28.5	30.6	24.3	25.0	27.1	29.0	22.5	23.2	25.1	26.9
		S/T	0.82	0.73	0.55	0.36	0.85	0.76	0.57	0.37	0.87	0.78	0.59	0.38	0.90	**0.80**	0.61	0.39	0.93	0.83	0.63	0.40	0.94	0.84	0.63	0.41
		ΔT	21	19	16	11	21	19	16	11	21	19	16	11	21	**19**	16	11	21	19	16	11	19	18	15	10
		kW	2.00	2.04	2.10	2.16	2.14	2.19	2.25	2.32	2.27	2.32	2.39	2.47	2.39	**2.44**	2.51	2.59	2.48	2.53	2.62	2.70	2.57	2.62	2.70	2.79
		Amps	7.1	7.2	7.5	7.8	7.7	7.8	8.1	8.4	8.3	8.5	8.8	9.1	8.9	**9.1**	9.4	9.8	9.5	9.7	10.0	10.4	10.0	10.3	10.6	11.0
		HI PR	238	256	270	282	267	287	303	316	303	326	344	359	345	**372**	392	409	388	418	441	460	429	462	488	509
		LO PR	106	113	124	132	112	120	131	139	117	124	136	145	123	**131**	143	152	129	137	149	159	133	142	155	165
	919	MBh	28.3	29.1	31.5	33.9	27.6	28.5	30.8	33.1	27.0	27.8	30.1	32.3	26.3	**27.1**	29.3	31.5	25.0	25.8	27.9	29.9	23.2	23.9	25.8	27.7
		S/T	0.86	0.77	0.58	0.37	0.89	0.79	0.60	0.39	0.91	0.81	0.62	0.40	0.94	**0.84**	0.64	0.41	0.97	0.87	0.66	0.42	0.98	0.88	0.67	0.43
		ΔT	20	18	15	10	20	18	15	10	20	18	15	10	20	**19**	15	11	20	18	15	10	19	17	14	10
		kW	2.01	2.05	2.11	2.18	2.16	2.20	2.27	2.34	2.29	2.34	2.41	2.49	2.40	**2.46**	2.53	2.61	2.50	2.56	2.64	2.72	2.59	2.64	2.73	2.82
		Amps	7.1	7.3	7.6	7.8	7.7	7.9	8.2	8.5	8.4	8.6	8.9	9.2	9.0	**9.2**	9.5	9.9	9.6	9.8	10.1	10.5	10.1	10.4	10.7	11.1
		HI PR	240	258	273	284	269	290	306	319	306	329	348	363	349	**375**	396	413	392	422	446	465	433	466	493	514
		LO PR	107	114	125	133	114	121	132	140	118	126	137	146	124	**132**	144	153	130	138	151	161	134	143	156	166

IDB: Entering Indoor Dry Bulb Temperature

Shaded area reflects ACCA (TVA) conditions

Amps = outdoor unit amps (comp.+fan)

High and low pressures are measured at the liquid and suction service valves.

kW = Total system power

			Outdoor Ambient Temperature																							
			65				75				85				95				105				115			
			Entering Indoor Wet Bulb Temperature																							
IDB	Airflow		59	63	67	71	59	63	67	71	59	63	67	71	59	63	67	71	59	63	67	71	59	63	67	71
80	1181	MBh	25.8	26.4	28.2	30.1	25.2	25.8	27.5	29.4	24.6	25.1	26.9	28.7	24.0	24.5	26.2	28.0	22.8	23.3	24.9	26.6	21.1	21.6	23.1	24.7
		S/T	0.86	0.81	0.66	0.49	0.90	0.84	0.68	0.51	0.92	0.86	0.70	0.52	0.95	0.89	0.72	0.54	0.98	0.92	0.75	0.56	0.99	0.93	0.76	0.57
		ΔT	23	22	20	16	24	23	20	16	24	23	20	16	24	23	20	16	24	23	20	16	22	21	18	15
		kW	1.97	2.01	2.07	2.13	2.11	2.15	2.22	2.29	2.24	2.28	2.35	2.43	2.35	2.40	2.47	2.55	2.44	2.49	2.57	2.66	2.52	2.58	2.66	2.75
		Amps	7.0	7.1	7.3	7.6	7.5	7.7	7.9	8.2	8.2	8.4	8.6	9.0	8.7	8.9	9.2	9.6	9.3	9.5	9.8	10.2	9.8	10.1	10.4	10.8
		HI PR	233	250	264	276	261	281	297	310	297	320	338	352	338	364	384	401	381	410	432	451	420	452	478	498
		LO PR	104	111	121	129	110	117	128	136	114	122	133	142	120	128	140	149	126	134	146	156	130	139	151	161
	1050	MBh	28.0	28.6	30.5	32.6	27.3	27.9	29.8	31.9	26.7	27.2	29.1	31.1	26.0	26.6	**28.4**	30.4	24.7	25.3	27.0	28.8	22.9	23.4	25.0	26.7
		S/T	0.90	0.84	0.68	0.51	0.93	0.87	0.71	0.53	0.95	0.89	0.73	0.54	0.98	0.92	**0.75**	0.56	1.00	0.96	0.78	0.58	1.00	0.96	0.78	0.59
		ΔT	23	22	19	15	23	22	19	16	23	22	19	16	23	23	**20**	16	23	22	19	15	21	21	18	14
		kW	2.01	2.05	2.12	2.18	2.16	2.20	2.27	2.34	2.29	2.34	2.41	2.49	2.40	2.46	**2.53**	2.61	2.50	2.56	2.64	2.72	2.59	2.64	2.73	2.82
		Amps	7.1	7.3	7.6	7.8	7.7	7.9	8.2	8.5	8.4	8.6	8.9	9.2	9.0	9.2	**9.5**	9.9	9.6	9.8	10.1	10.5	10.1	10.4	10.7	11.1
		HI PR	240	258	273	284	269	290	306	319	306	330	348	363	349	375	**396**	413	392	422	446	465	433	466	493	514
		LO PR	107	114	125	133	114	121	132	140	118	126	137	146	124	132	**144**	153	130	138	151	161	134	143	156	166
	919	MBh	28.8	29.4	31.4	33.6	28.1	28.7	30.7	32.8	27.5	28.1	30.0	32.1	26.8	27.4	29.3	31.3	25.5	26.0	27.8	29.7	23.6	24.1	25.7	27.5
		S/T	0.94	0.88	0.72	0.54	1.00	0.91	0.74	0.56	1.00	0.94	0.76	0.57	1.00	0.97	0.79	0.59	1.00	1.00	0.82	0.61	1.00	1.00	0.82	0.62
		ΔT	22	21	18	15	23	21	19	15	22	21	19	15	22	22	19	15	21	21	19	15	19	20	17	14
		kW	2.03	2.07	2.13	2.20	2.18	2.22	2.29	2.36	2.31	2.36	2.43	2.51	2.42	2.48	2.55	2.64	2.52	2.58	2.66	2.74	2.61	2.66	2.75	2.84
		Amps	7.2	7.4	7.6	7.9	7.8	8.0	8.2	8.6	8.5	8.7	9.0	9.3	9.1	9.3	9.6	10.0	9.6	9.9	10.2	10.6	10.2	10.5	10.8	11.2
		HI PR	242	261	275	287	272	293	309	322	309	333	351	367	352	379	400	417	396	426	450	470	438	471	498	519
		LO PR	109	116	126	134	115	122	133	142	119	127	138	147	125	133	145	155	131	140	152	162	136	144	158	168
85	1181	MBh	26.3	26.8	28.0	29.9	25.7	26.1	27.4	29.2	25.0	25.5	26.7	28.5	24.4	24.9	26.1	27.8	23.2	23.7	24.8	26.4	21.5	21.9	23.0	24.5
		S/T	0.91	0.87	0.79	0.64	0.94	0.91	0.82	0.66	0.96	0.93	0.84	0.68	0.99	0.96	0.86	0.70	1.00	0.99	0.90	0.73	1.00	1.00	0.91	0.73
		ΔT	25	25	23	20	25	25	24	20	25	25	24	20	25	25	24	21	24	25	23	20	23	23	22	19
		kW	1.98	2.02	2.08	2.15	2.13	2.17	2.24	2.31	2.25	2.30	2.37	2.45	2.37	2.42	2.49	2.57	2.46	2.51	2.59	2.68	2.54	2.60	2.68	2.77
		Amps	7.0	7.2	7.4	7.7	7.6	7.8	8.0	8.3	8.2	8.4	8.7	9.0	8.8	9.0	9.3	9.7	9.4	9.6	9.9	10.3	9.9	10.2	10.5	10.9
		HI PR	235	253	267	279	264	284	300	313	300	323	341	356	342	368	388	405	384	414	437	456	425	457	483	503
		LO PR	105	112	122	130	111	118	129	138	116	123	134	143	121	129	141	150	127	135	148	157	132	140	153	163
	1050	MBh	28.5	29.0	30.4	32.4	27.8	28.3	29.7	31.7	27.1	27.7	29.0	30.9	26.5	27.0	28.3	30.1	25.1	25.6	26.8	28.6	23.3	23.7	24.9	26.5
		S/T	0.94	0.91	0.82	0.66	0.97	0.94	0.85	0.69	1.00	0.96	0.87	0.71	1.00	0.99	0.90	0.73	1.00	1.00	0.93	0.76	1.00	1.00	0.94	0.76
		ΔT	25	24	23	20	25	24	23	20	25	24	23	20	24	25	23	20	23	24	23	20	21	22	21	19
		kW	2.03	2.07	2.13	2.20	2.18	2.22	2.29	2.36	2.31	2.36	2.43	2.51	2.42	2.48	2.55	2.64	2.52	2.58	2.66	2.74	2.61	2.66	2.75	2.84
		Amps	7.2	7.4	7.6	7.9	7.8	8.0	8.2	8.6	8.5	8.7	9.0	9.3	9.1	9.3	9.6	10.0	9.6	9.9	10.2	10.6	10.2	10.5	10.8	11.2
		HI PR	242	261	275	287	272	293	309	322	309	333	351	367	352	379	400	417	396	426	450	470	438	471	498	519
		LO PR	109	116	126	134	115	122	133	142	119	127	138	147	125	133	145	155	131	140	152	162	136	144	158	168
	919	MBh	29.3	29.9	31.3	33.4	28.6	29.2	30.6	32.6	27.9	28.5	29.8	31.8	27.3	27.8	29.1	31.1	25.9	26.4	27.7	29.5	24.0	24.5	25.6	27.3
		S/T	0.98	0.95	0.86	0.70	1.00	0.98	0.89	0.72	1.00	1.00	0.91	0.74	1.00	1.00	0.94	0.76	1.00	1.00	0.98	0.79	1.00	1.00	0.98	0.80
		ΔT	24	23	22	19	23	23	22	19	23	23	22	19	22	23	22	19	21	22	22	19	20	20	21	18
		kW	2.04	2.08	2.15	2.21	2.19	2.24	2.31	2.38	2.33	2.37	2.45	2.53	2.44	2.49	2.57	2.66	2.54	2.60	2.68	2.77	2.63	2.69	2.77	2.86
		Amps	7.3	7.4	7.7	8.0	7.9	8.1	8.3	8.6	8.5	8.8	9.0	9.4	9.1	9.4	9.7	10.0	9.7	10.0	10.3	10.7	10.3	10.6	10.9	11.3
		HI PR	245	263	278	290	275	296	312	326	312	336	355	370	356	383	404	422	400	431	455	474	442	476	503	524
		LO PR	110	117	127	136	116	123	135	143	120	128	140	149	126	135	147	156	133	141	154	164	137	146	159	170

IDB: Entering Indoor Dry Bulb Temperature

Shaded area reflects AHRI conditions

Amps = outdoor unit amps (comp.+fan)

High and low pressures are measured at the liquid and suction service valves.

kW = Total system power

			Outdoor Ambient Temperature																							
			65				75				85				95				105				115			
			Entering Indoor Wet Bulb Temperature																							
IDB	Airflow		59	63	67	71	59	63	67	71	59	63	67	71	59	63	67	71	59	63	67	71	59	63	67	71
70	1050	MBh	31.1	32.2	35.3	-	30.4	31.5	34.5	-	29.6	30.7	33.7	-	28.9	30.0	32.8	-	27.5	28.5	31.2	-	25.4	26.4	28.9	-
		S/T	0.70	0.58	0.40	-	0.72	0.60	0.42	-	0.74	0.62	0.43	-	0.76	0.64	0.44	-	0.79	0.66	0.46	-	0.80	0.67	0.46	-
		ΔT	19	16	12	-	19	17	13	-	19	17	13	-	19	17	13	-	19	16	13	-	18	15	12	-
		kW	2.40	2.44	2.52	-	2.57	2.63	2.71	-	2.73	2.78	2.87	-	2.86	2.92	3.02	-	2.98	3.04	3.14	-	3.08	3.15	3.25	-
		Amps	8.7	8.9	9.2	-	9.4	9.7	10.0	-	10.3	10.5	10.9	-	11.0	11.3	11.6	-	11.7	12.0	12.4	-	12.4	12.7	13.1	-
		HI PR	214	231	244	-	241	259	273	-	274	294	311	-	312	335	354	-	351	377	398	-	387	417	440	-
		LO PR	99	106	115	-	105	112	122	-	109	116	127	-	115	122	133	-	120	128	139	-	124	132	144	-
	1200	MBh	33.7	34.9	38.2	-	32.9	34.1	37.4	-	32.1	33.3	36.5	-	31.3	32.5	35.6	-	29.8	30.8	33.8	-	27.6	28.6	31.3	-
		S/T	0.72	0.60	0.42	-	0.75	0.62	0.43	-	0.77	0.64	0.44	-	0.79	0.66	0.46	-	0.82	0.69	0.48	-	0.83	0.69	0.48	-
		ΔT	19	16	12	-	19	16	12	-	19	16	12	-	19	16	12	-	19	16	12	-	17	15	11	-
		kW	2.45	2.50	2.58	-	2.63	2.69	2.77	-	2.79	2.85	2.94	-	2.93	3.00	3.09	-	3.05	3.12	3.22	-	3.16	3.23	3.33	-
		Amps	9.0	9.2	9.5	-	9.7	10.0	10.3	-	10.6	10.8	11.2	-	11.3	11.6	12.0	-	12.0	12.3	12.8	-	12.8	13.1	13.5	-
		HI PR	221	238	251	-	248	267	282	-	282	304	321	-	321	346	365	-	361	389	411	-	399	430	454	-
		LO PR	102	109	119	-	108	115	126	-	112	120	131	-	118	126	137	-	124	132	144	-	128	136	149	-
	1350	MBh	34.7	36.0	39.4	-	33.9	35.1	38.5	-	33.1	34.3	37.6	-	32.3	33.4	36.6	-	30.7	31.8	34.8	-	28.4	29.4	32.2	-
		S/T	0.76	0.63	0.44	-	0.78	0.65	0.45	-	0.80	0.67	0.47	-	0.83	0.69	0.48	-	0.86	0.72	0.50	-	0.87	0.73	0.50	-
		ΔT	18	15	12	-	18	16	12	-	18	16	12	-	18	16	12	-	18	16	12	-	17	15	11	-
		kW	2.47	2.52	2.60	-	2.65	2.71	2.79	-	2.82	2.88	2.97	-	2.96	3.02	3.12	-	3.08	3.15	3.25	-	3.18	3.25	3.36	-
		Amps	9.1	9.3	9.6	-	9.8	10.0	10.4	-	10.7	10.9	11.3	-	11.4	11.7	12.1	-	12.1	12.5	12.9	-	12.9	13.2	13.7	-
		HI PR	223	240	254	-	250	270	285	-	285	307	324	-	324	349	369	-	365	393	415	-	403	434	458	-
		LO PR	103	110	120	-	109	116	127	-	114	121	132	-	119	127	139	-	125	133	145	-	129	138	150	-
75	1050	MBh	31.6	32.5	35.2	37.8	30.9	31.8	34.4	36.9	30.1	31.0	33.6	36.1	29.4	**30.3**	32.8	35.2	27.9	28.8	31.1	33.4	25.9	26.6	28.8	31.0
		S/T	0.79	0.71	0.54	0.34	0.82	0.73	0.55	0.36	0.84	0.75	0.57	0.37	0.87	**0.78**	0.59	0.38	0.90	0.81	0.61	0.39	0.91	0.81	0.61	0.40
		ΔT	22	20	17	11	22	20	17	12	22	20	17	12	22	**21**	17	12	22	20	17	11	21	19	16	11
		kW	2.41	2.46	2.54	2.62	2.59	2.65	2.73	2.81	2.75	2.81	2.89	2.99	2.89	**2.95**	3.04	3.14	3.00	3.07	3.17	3.27	3.11	3.17	3.28	3.38
		Amps	8.8	9.0	9.3	9.7	9.5	9.8	10.1	10.5	10.4	10.6	11.0	11.4	11.1	**11.4**	11.7	12.2	11.8	12.1	12.5	13.0	12.5	12.8	13.3	13.8
		HI PR	217	233	246	257	243	262	276	288	276	297	314	328	315	**339**	358	373	354	381	402	420	391	421	445	464
		LO PR	100	107	117	124	106	113	123	131	110	117	128	136	116	**123**	134	143	121	129	141	150	125	133	146	155
	1200	MBh	34.2	35.3	38.2	41.0	33.5	34.4	37.3	40.0	32.7	33.6	36.4	39.1	31.9	**32.8**	35.5	38.1	30.3	31.2	33.7	36.2	28.0	28.9	31.2	33.5
		S/T	0.82	0.73	0.56	0.36	0.85	0.76	0.58	0.37	0.87	0.78	0.59	0.38	0.90	**0.80**	0.61	0.39	0.93	0.83	0.63	0.41	0.94	0.84	0.64	0.41
		ΔT	22	20	16	11	22	20	16	11	22	20	16	11	22	**20**	17	11	22	20	16	11	20	19	15	11
		kW	2.47	2.52	2.60	2.68	2.65	2.71	2.79	2.88	2.82	2.88	2.97	3.06	2.96	**3.02**	3.12	3.22	3.08	3.15	3.25	3.35	3.18	3.25	3.36	3.47
		Amps	9.1	9.3	9.6	10.0	9.8	10.0	10.4	10.8	10.7	10.9	11.3	11.7	11.4	**11.7**	12.1	12.5	12.2	12.5	12.9	13.4	12.9	13.2	13.7	14.2
		HI PR	223	240	254	265	251	270	285	297	285	307	324	338	325	**349**	369	385	365	393	415	433	403	434	458	478
		LO PR	103	110	120	128	109	116	127	135	114	121	132	141	119	**127**	139	148	125	133	145	155	129	138	150	160
	1350	MBh	35.3	36.3	39.3	42.2	34.5	35.5	38.4	41.2	33.6	34.6	37.5	40.2	32.8	**33.8**	36.6	39.3	31.2	32.1	34.7	37.3	28.9	29.7	32.2	34.5
		S/T	0.86	0.77	0.58	0.37	0.89	0.80	0.60	0.39	0.91	0.82	0.62	0.40	0.94	**0.84**	0.64	0.41	0.98	0.88	0.66	0.43	0.99	0.88	0.67	0.43
		ΔT	21	19	16	11	21	19	16	11	21	19	16	11	21	**19**	16	11	21	19	16	11	19	18	15	10
		kW	2.49	2.54	2.62	2.70	2.68	2.73	2.82	2.91	2.84	2.90	2.99	3.09	2.98	**3.05**	3.14	3.25	3.10	3.17	3.27	3.38	3.21	3.28	3.39	3.50
		Amps	9.1	9.4	9.7	10.0	9.9	10.1	10.5	10.9	10.8	11.0	11.4	11.8	11.5	**11.8**	12.2	12.7	12.3	12.6	13.0	13.5	13.0	13.3	13.8	14.3
		HI PR	226	243	256	267	253	272	288	300	288	310	327	341	328	**353**	372	388	369	397	419	437	407	438	463	483
		LO PR	104	111	121	129	110	117	128	137	115	122	133	142	121	**128**	140	149	126	134	147	156	131	139	152	162

IDB: Entering Indoor Dry Bulb Temperature

Shaded area reflects ACCA (TVA) conditions

Amps = outdoor unit amps (comp.+fan)

High and low pressures are measured at the liquid and suction service valves.

kW = Total system power

Expanded Cooling Data — ASX130361C* (cont.)

			Outdoor Ambient Temperature																							
			65				75				85				95				105				115			
			Entering Indoor Wet Bulb Temperature																							
IDB	Airflow		59	63	67	71	59	63	67	71	59	63	67	71	59	63	67	71	59	63	67	71	59	63	67	71
80	1050	MBh	32.2	32.9	35.1	37.5	31.4	32.1	34.3	36.7	30.7	31.3	33.5	35.8	29.9	30.6	32.7	34.9	28.4	29.1	31.0	33.2	26.3	26.9	28.8	30.7
		S/T	0.87	0.81	0.66	0.49	0.90	0.84	0.69	0.51	0.92	0.86	0.70	0.53	0.95	0.89	0.73	0.54	0.99	0.93	0.75	0.56	1.00	0.93	0.76	0.57
		ΔT	24	23	20	16	25	24	21	16	25	24	21	16	25	24	21	17	25	24	20	16	23	22	19	15
		kW	2.43	2.48	2.56	2.64	2.61	2.67	2.75	2.84	2.77	2.83	2.92	3.01	2.91	2.97	3.07	3.17	3.03	3.09	3.19	3.30	3.13	3.20	3.30	3.41
		Amps	8.9	9.1	9.4	9.8	9.6	9.9	10.2	10.6	10.5	10.7	11.1	11.5	11.2	11.5	11.9	12.3	11.9	12.2	12.6	13.1	12.6	13.0	13.4	13.9
		Hi PR	219	235	249	259	245	264	279	291	279	300	317	331	318	342	361	377	358	385	406	424	395	425	449	468
		Lo PR	101	108	118	125	107	114	124	132	111	118	129	138	117	124	136	145	123	130	142	152	127	135	147	157
	1200	MBh	34.9	35.6	38.1	40.7	34.0	34.8	37.2	39.7	33.2	34.0	36.3	38.8	32.4	33.1	**35.4**	37.8	30.8	31.5	33.6	36.0	28.5	29.2	31.2	33.3
		S/T	0.90	0.84	0.69	0.51	0.93	0.87	0.71	0.53	0.96	0.90	0.73	0.55	0.99	0.93	**0.75**	0.56	1.00	0.96	0.78	0.58	1.00	0.97	0.79	0.59
		ΔT	24	23	20	16	24	23	20	16	24	23	20	16	25	23	**20**	16	24	23	20	16	22	22	19	15
		kW	2.49	2.54	2.62	2.70	2.68	2.73	2.82	2.91	2.84	2.90	2.99	3.09	2.98	3.05	**3.14**	3.25	3.11	3.17	3.27	3.38	3.21	3.28	3.39	3.50
		Amps	9.1	9.4	9.7	10.0	9.9	10.1	10.5	10.9	10.8	11.0	11.4	11.8	11.5	11.8	**12.2**	12.7	12.3	12.6	13.0	13.5	13.0	13.3	13.8	14.3
		Hi PR	226	243	256	267	253	272	288	300	288	310	327	341	328	353	**373**	389	369	397	419	437	407	438	463	483
		Lo PR	105	111	121	129	110	117	128	137	115	122	133	142	121	128	**140**	149	126	134	147	156	131	139	152	162
	1350	MBh	35.9	36.7	39.2	41.9	35.1	35.8	38.3	40.9	34.2	35.0	37.4	40.0	33.4	34.1	36.5	39.0	31.7	32.4	34.6	37.0	29.4	30.0	32.1	34.3
		S/T	0.94	0.88	0.72	0.54	1.00	0.92	0.75	0.56	1.00	0.94	0.76	0.57	1.00	0.97	0.79	0.59	1.00	1.00	0.82	0.61	1.00	1.00	0.83	0.62
		ΔT	23	22	19	15	24	22	19	16	23	22	19	16	23	23	20	16	22	22	19	15	20	20	18	14
		kW	2.51	2.56	2.64	2.72	2.70	2.75	2.84	2.93	2.86	2.92	3.01	3.11	3.01	3.07	3.17	3.27	3.13	3.20	3.30	3.41	3.24	3.31	3.42	3.53
		Amps	9.2	9.5	9.8	10.1	10.0	10.2	10.6	11.0	10.9	11.1	11.5	11.9	11.6	11.9	12.3	12.8	12.4	12.7	13.1	13.6	13.1	13.5	13.9	14.5
		Hi PR	228	245	259	270	256	275	290	303	291	313	330	345	331	356	376	392	372	401	423	441	412	443	468	488
		Lo PR	106	112	123	131	112	119	130	138	116	123	135	143	122	130	141	151	128	136	148	158	132	140	153	163
85	1050	MBh	32.7	33.4	34.9	37.3	32.0	32.6	34.1	36.4	31.2	31.8	33.3	35.6	30.5	31.0	32.5	34.7	28.9	29.5	30.9	33.0	26.8	27.3	28.6	30.5
		S/T	0.91	0.88	0.79	0.64	0.94	0.91	0.82	0.67	0.97	0.93	0.84	0.68	1.00	0.96	0.87	0.70	1.00	1.00	0.90	0.73	1.00	1.00	0.91	0.74
		ΔT	26	26	24	21	26	26	25	21	26	26	25	21	27	26	25	21	25	26	24	21	23	24	23	20
		kW	2.45	2.50	2.58	2.66	2.63	2.69	2.77	2.86	2.79	2.85	2.94	3.04	2.93	3.00	3.09	3.19	3.05	3.12	3.22	3.33	3.16	3.23	3.33	3.44
		Amps	9.0	9.2	9.5	9.9	9.7	10.0	10.3	10.7	10.6	10.8	11.2	11.6	11.3	11.6	12.0	12.4	12.0	12.3	12.8	13.2	12.8	13.1	13.5	14.0
		Hi PR	221	238	251	262	248	267	282	294	282	303	320	334	321	346	365	381	361	389	411	428	399	430	454	473
		Lo PR	102	109	119	127	108	115	126	134	112	120	131	139	118	126	137	146	124	132	144	153	128	136	149	158
	1200	MBh	35.5	36.2	37.9	40.4	34.6	35.3	37.0	39.5	33.8	34.5	36.1	38.5	33.0	33.6	35.2	37.6	31.3	31.9	33.5	35.7	29.0	29.6	31.0	33.1
		S/T	0.94	0.91	0.82	0.67	0.98	0.94	0.85	0.69	1.00	0.97	0.87	0.71	1.00	1.00	0.90	0.73	1.00	1.00	0.93	0.76	1.00	1.00	0.94	0.76
		ΔT	26	25	24	21	26	26	24	21	26	26	24	21	25	26	24	21	24	24	24	21	22	23	22	19
		kW	2.51	2.56	2.64	2.72	2.70	2.75	2.84	2.93	2.86	2.92	3.01	3.11	3.01	3.07	3.17	3.27	3.13	3.20	3.30	3.41	3.24	3.31	3.42	3.53
		Amps	9.2	9.5	9.8	10.1	10.0	10.2	10.6	11.0	10.9	11.1	11.5	11.9	11.6	11.9	12.3	12.8	12.4	12.7	13.1	13.6	13.1	13.5	13.9	14.5
		Hi PR	228	245	259	270	256	275	290	303	291	313	330	345	331	356	376	392	372	401	423	441	412	443	468	488
		Lo PR	106	112	123	131	112	119	130	138	116	123	135	143	122	130	141	151	128	136	148	158	132	140	153	163
	1350	MBh	36.5	37.2	39.0	41.6	35.7	36.4	38.1	40.6	34.8	35.5	37.2	39.7	34.0	34.6	36.3	38.7	32.3	32.9	34.5	36.8	29.9	30.5	31.9	34.1
		S/T	0.99	0.95	0.86	0.70	1.00	0.99	0.89	0.72	1.00	1.00	0.91	0.74	1.00	1.00	0.94	0.77	1.00	1.00	0.98	0.80	1.00	1.00	0.99	0.80
		ΔT	25	24	23	20	24	24	23	20	24	24	23	20	23	24	23	20	22	22	23	20	20	21	21	19
		kW	2.53	2.58	2.66	2.74	2.72	2.77	2.86	2.95	2.88	2.95	3.04	3.14	3.03	3.10	3.20	3.30	3.16	3.22	3.33	3.44	3.26	3.33	3.44	3.56
		Amps	9.3	9.5	9.9	10.2	10.1	10.3	10.7	11.1	11.0	11.2	11.6	12.1	11.7	12.0	12.4	12.9	12.5	12.8	13.2	13.8	13.3	13.6	14.0	14.6
		Hi PR	230	248	261	273	258	278	293	306	294	316	334	348	334	360	380	396	376	405	427	446	416	447	472	493
		Lo PR	107	113	124	132	113	120	131	139	117	125	136	145	123	131	143	152	129	137	150	159	133	142	155	165

IDB: Entering Indoor Dry Bulb Temperature

Shaded area reflects AHRI conditions

Amps = outdoor unit amps (comp.+fan)

High and low pressures are measured at the liquid and suction service valves.

kW = Total system power

			Outdoor Ambient Temperature																							
			65				75				85				95				105				115			
			Entering Indoor Wet Bulb Temperature																							
IDB	Airflow		59	63	67	71	59	63	67	71	59	63	67	71	59	63	67	71	59	63	67	71	59	63	67	71
70	1350	MBh	32.9	34.1	37.4	-	32.2	33.3	36.5	-	31.4	32.5	35.7	-	30.6	31.7	34.8	-	29.1	30.2	33.0	-	27.0	27.9	30.6	-
		S/T	0.77	0.65	0.45	-	0.80	0.67	0.46	-	0.82	0.69	0.48	-	0.85	0.71	0.49	-	0.88	0.74	0.51	-	0.89	0.74	0.51	-
		ΔT	17	15	11	-	18	15	12	-	18	15	12	-	18	15	12	-	17	15	11	-	16	14	11	-
		kW	2.44	2.49	2.55	-	2.61	2.65	2.73	-	2.75	2.80	2.88	-	2.88	2.94	3.02	-	2.99	3.05	3.14	-	3.08	3.14	3.24	-
		Amps	9.7	9.9	10.0	-	10.1	10.3	10.5	-	10.6	10.8	11.0	-	11.0	11.2	11.4	-	11.4	11.6	11.8	-	11.8	12.0	12.2	-
		HI PR	183	197	208	-	205	221	234	-	234	252	266	-	266	286	302	-	299	322	340	-	331	356	376	-
		LO PR	95	101	110	-	100	107	117	-	104	111	121	-	110	117	127	-	115	122	134	-	119	126	138	-
	1200	MBh	32.0	33.1	36.3	-	31.2	32.4	35.5	-	30.5	31.6	34.6	-	29.7	30.8	33.8	-	28.2	29.3	32.1	-	26.2	27.1	29.7	-
		S/T	0.74	0.62	0.43	-	0.76	0.64	0.44	-	0.78	0.65	0.45	-	0.81	0.68	0.47	-	0.84	0.70	0.49	-	0.85	0.71	0.49	-
		ΔT	18	16	12	-	18	16	12	-	18	16	12	-	18	16	12	-	18	16	12	-	17	15	11	-
		kW	2.42	2.47	2.54	-	2.59	2.64	2.71	-	2.73	2.78	2.86	-	2.86	2.91	3.00	-	2.96	3.02	3.11	-	3.06	3.12	3.21	-
		Amps	9.7	9.8	10.0	-	10.1	10.2	10.4	-	10.6	10.7	10.9	-	11.0	11.1	11.3	-	11.4	11.5	11.8	-	11.8	11.9	12.2	-
		HI PR	181	195	206	-	203	219	231	-	231	249	263	-	264	284	299	-	296	319	337	-	328	353	372	-
		LO PR	94	100	109	-	99	106	116	-	103	110	120	-	109	116	126	-	114	121	132	-	118	125	137	-
	1050	MBh	29.5	30.6	33.5	-	28.8	29.9	32.7	-	28.1	29.2	31.9	-	27.4	28.4	31.2	-	26.1	27.0	29.6	-	24.2	25.0	27.4	-
		S/T	0.71	0.59	0.41	-	0.74	0.62	0.43	-	0.76	0.63	0.44	-	0.78	0.65	0.45	-	0.81	0.68	0.47	-	0.82	0.68	0.47	-
		ΔT	18	16	12	-	19	16	12	-	19	16	12	-	19	16	12	-	18	16	12	-	17	15	11	-
		kW	2.37	2.42	2.48	-	2.53	2.58	2.65	-	2.67	2.72	2.80	-	2.79	2.85	2.93	-	2.90	2.96	3.04	-	2.99	3.05	3.14	-
		Amps	9.6	9.7	9.8	-	10.0	10.1	10.3	-	10.4	10.5	10.7	-	10.8	10.9	11.1	-	11.2	11.3	11.6	-	11.6	11.7	12.0	-
		HI PR	176	189	200	-	197	212	224	-	224	242	255	-	256	275	291	-	288	309	327	-	318	342	361	-
		LO PR	91	97	106	-	96	103	112	-	100	107	116	-	105	112	122	-	110	117	128	-	114	121	133	-
75	1350	MBh	33.5	34.5	37.3	40.0	32.7	33.7	36.4	39.1	31.9	32.9	35.6	38.2	31.1	32.1	34.7	37.3	29.6	30.5	33.0	35.4	27.4	28.2	30.5	32.8
		S/T	0.88	0.79	0.60	0.38	0.91	0.81	0.62	0.40	0.93	0.84	0.63	0.41	0.96	0.86	0.65	0.42	1.00	0.90	0.68	0.44	1.00	0.90	0.68	0.44
		ΔT	20	18	15	10	20	19	15	11	20	19	15	11	20	19	15	11	20	19	15	11	19	17	14	10
		kW	2.46	2.50	2.57	2.65	2.62	2.67	2.75	2.83	2.77	2.82	2.91	2.99	2.90	2.96	3.04	3.14	3.01	3.07	3.16	3.26	3.10	3.17	3.26	3.36
		Amps	9.8	9.9	10.1	10.3	10.2	10.3	10.5	10.7	10.7	10.8	11.0	11.3	11.1	11.2	11.4	11.7	11.5	11.7	11.9	12.2	11.9	12.1	12.3	12.6
		HI PR	185	199	210	219	208	223	236	246	236	254	268	280	269	289	306	319	303	326	344	359	334	360	380	396
		LO PR	96	102	112	119	101	108	118	126	105	112	123	130	111	118	129	137	116	124	135	144	120	128	139	149
	1200	MBh	32.5	33.5	36.2	38.9	31.8	32.7	35.4	38.0	31.0	31.9	34.5	37.1	30.2	**31.1**	33.7	36.2	28.7	29.6	32.0	34.4	26.6	27.4	29.7	31.8
		S/T	0.84	0.75	0.57	0.37	0.87	0.78	0.59	0.38	0.89	0.80	0.60	0.39	0.92	**0.82**	0.62	0.40	0.95	0.85	0.65	0.42	0.96	0.86	0.65	0.42
		ΔT	21	19	16	11	21	19	16	11	21	19	16	11	21	**20**	16	11	21	19	16	11	20	18	15	10
		kW	2.44	2.49	2.56	2.63	2.61	2.66	2.73	2.81	2.75	2.80	2.89	2.97	2.88	**2.94**	3.02	3.11	2.99	3.05	3.14	3.23	3.08	3.14	3.24	3.34
		Amps	9.7	9.9	10.0	10.2	10.1	10.3	10.5	10.7	10.6	10.8	11.0	11.2	11.0	**11.2**	11.4	11.6	11.4	11.6	11.8	12.1	11.8	12.0	12.2	12.5
		HI PR	183	197	208	217	206	221	234	244	234	252	266	277	266	**287**	303	316	300	322	340	355	331	356	376	392
		LO PR	95	101	110	118	100	107	117	124	104	111	121	129	110	**117**	127	136	115	122	134	142	119	127	138	147
	1050	MBh	30.0	30.9	33.4	35.9	29.3	30.2	32.7	35.1	28.6	29.5	31.9	34.2	27.9	28.7	31.1	33.4	26.5	27.3	29.6	31.7	24.6	25.3	27.4	29.4
		S/T	0.81	0.72	0.55	0.35	0.84	0.75	0.57	0.36	0.86	0.77	0.58	0.37	0.89	0.79	0.60	0.39	0.92	0.82	0.62	0.40	0.93	0.83	0.63	0.40
		ΔT	21	20	16	11	21	20	16	11	22	20	16	11	22	20	16	11	21	20	16	11	20	18	15	10
		kW	2.39	2.43	2.50	2.57	2.55	2.60	2.67	2.75	2.69	2.74	2.82	2.90	2.81	2.87	2.95	3.04	2.92	2.98	3.07	3.16	3.01	3.07	3.16	3.26
		Amps	9.6	9.7	9.9	10.1	10.0	10.1	10.3	10.5	10.5	10.6	10.8	11.0	10.8	11.0	11.2	11.4	11.2	11.4	11.6	11.9	11.6	11.8	12.0	12.3
		HI PR	178	191	202	211	199	215	227	236	227	244	258	269	258	278	293	306	291	313	330	344	321	345	365	380
		LO PR	92	98	107	114	97	104	113	121	101	108	118	125	106	113	124	132	112	119	130	138	115	123	134	143

IDB: Entering Indoor Dry Bulb Temperature

High and low pressures are measured at the liquid and suction service valves.

Shaded area reflects ACCA (TVA) conditions

kW = Total system power

Amps = outdoor unit amps (comp.+fan)

Design Subcooling 9 ±3 °F @ the liquid service valve, ARI 95 test conditions

Expanded Cooling Data — ASX130361D* (cont.)

			Outdoor Ambient Temperature																							
			65ºF				75ºF				85ºF				95ºF				105ºF				115ºF			
			Entering Indoor Wet Bulb Temperature																							
IDB	**Airflow**		**59**	**63**	**67**	**71**	**59**	**63**	**67**	**71**	**59**	**63**	**67**	**71**	**59**	**63**	**67**	**71**	**59**	**63**	**67**	**71**	**59**	**63**	**67**	**71**
		MBh	34.1	34.8	37.2	39.8	33.3	34.0	36.3	38.8	32.5	33.2	35.5	37.9	31.7	32.4	34.6	37.0	30.1	30.8	32.9	35.1	27.9	28.5	30.5	32.6
		S/T	0.96	0.90	0.74	0.6	1.00	0.94	0.76	0.57	1.00	0.96	0.78	0.6	1.00	1.00	0.81	0.60	1.00	1.00	0.84	0.6	1.00	1.00	0.84	0.63
		Δ T	22	21	19	15	23	22	19	15	22	22	19	15	22	22	19	15	21	21	19	15	19	19	18	14
	1350	kW	2.48	2.52	2.59	2.7	2.64	2.69	2.77	2.85	2.79	2.85	2.93	3.0	2.92	2.98	3.07	3.16	3.03	3.09	3.19	3.3	3.13	3.19	3.29	3.39
		/anos	9.8	10.0	10.1	10.3	10.2	10.4	10.6	10.8	10.7	10.9	11.1	11.3	11.1	11.3	11.5	11.8	11.5	11.7	12.0	12.2	12.0	12.1	12.4	12.7
		Hi PR	187	201	212	221.5	210	226	238	249	238	257	271	282.7	272	292	309	322	306	329	347	362.2	338	363	384	400
		Lo PR	97	103	113	120.0	103	109	119	127	107	113	124	131.8	112	119	130	138	117	125	136	145.1	121	129	141	150
		MBh	33.1	33.8	36.1	38.6	32.3	33.0	35.3	37.7	31.5	32.2	34.4	36.8	30.8	31.4	**33.6**	35.9	29.2	29.9	31.9	34.1	27.1	27.7	29.6	31.6
		S/T	0.92	0.86	0.70	0.5	0.95	0.89	0.73	0.54	0.98	0.92	0.75	0.6	1.00	0.95	**0.77**	0.58	1.00	0.98	0.80	0.6	1.00	0.99	0.81	0.60
		Δ T	23	22	19	16	24	23	20	16	24	23	20	16	24	23	**20**	16	22	22	20	16	21	21	18	15
80	**1200**	kW	2.46	2.50	2.57	2.6	2.62	2.67	2.75	2.83	2.77	2.82	2.91	3.0	2.90	2.96	**3.05**	3.14	3.01	3.07	3.16	3.3	3.10	3.17	3.26	3.36
		/anos	9.8	9.9	10.1	10.3	10.2	10.3	10.5	10.7	10.7	10.8	11.0	11.3	11.1	11.2	**11.5**	11.7	11.5	11.7	11.9	12.2	11.9	12.1	12.3	12.6
		Hi PR	185	199	210	219.3	208	223	236	246	236	254	268	279.9	269	289	**306**	319	303	326	344	358.6	334	360	380	396
		Lo PR	96	102	112	118.8	102	108	118	126	105	112	123	130.5	111	118	**129**	137	116	124	135	143.6	120	128	140	149
		MBh	30.5	31.2	33.3	35.6	29.8	30.5	32.6	34.8	29.1	29.8	31.8	34.0	28.4	29.0	31.0	33.2	27.0	27.6	29.5	31.5	25.0	25.5	27.3	29.2
		S/T	0.89	0.83	0.68	0.5	0.92	0.86	0.70	0.52	0.94	0.88	0.72	0.5	0.97	0.91	0.74	0.55	1.01	0.95	0.77	0.6	1.02	0.95	0.78	0.58
		Δ T	24	23	20	16	24	23	20	16	24	23	20	16	24	23	20	16	24	23	20	16	22	21	19	15
	1050	kW	2.41	2.45	2.52	2.6	2.57	2.62	2.69	2.77	2.71	2.76	2.84	2.9	2.84	2.89	2.98	3.07	2.94	3.00	3.09	3.2	3.03	3.10	3.19	3.29
		/anos	9.7	9.8	9.9	10.1	10.0	10.2	10.4	10.6	10.5	10.6	10.8	11.1	10.9	11.1	11.3	11.5	11.3	11.5	11.7	11.9	11.7	11.9	12.1	12.4
		Hi PR	179	193	204	212.7	201	217	229	239	229	246	260	271.5	261	281	296	309	293	316	333	347.8	324	349	368	384
		Lo PR	93	99	108	115.3	98	105	114	122	102	109	119	126.6	107	114	125	133	113	120	131	139.3	117	124	135	144
		MBh	34.7	35.3	37.0	39.5	33.9	34.5	36.2	38.6	33.1	33.7	35.3	37.7	32.3	32.9	34.4	36.7	30.6	31.2	32.7	34.9	28.4	28.9	30.3	32.3
		S/T	1.00	0.98	0.88	0.71	1.00	1.00	0.91	0.74	1.00	1.00	0.94	0.76	1.00	1.00	0.97	0.78	1.00	1.00	1.00	0.81	1.00	1.00	1.00	0.82
		Δ T	24	23	22	19	23	24	22	19	23	23	22	19	22	22	23	20	21	21	22	19	19	20	21	18
	1350	kW	2.49	2.54	2.61	2.68	2.66	2.71	2.79	2.87	2.81	2.87	2.95	3.04	2.94	3.00	3.09	3.19	3.06	3.12	3.21	3.31	3.15	3.22	3.31	3.42
		/anos	9.9	10.0	10.2	10.4	10.3	10.4	10.6	10.8	10.8	10.9	11.1	11.4	11.2	11.4	11.6	11.8	11.6	11.8	12.0	12.3	12.0	12.2	12.5	12.7
		Hi PR	189	203	214	224	212	228	241	251	241	259	274	285	274	295	312	325	309	332	351	366	341	367	387	404
		Lo PR	98	104	114	121	104	110	120	128	108	114	125	133	113	120	131	140	118	126	138	147	123	130	142	152
		MBh	33.7	34.3	35.9	38.3	32.9	33.5	35.1	37.5	32.1	32.7	34.3	36.6	31.3	31.9	33.4	35.7	29.7	30.3	31.8	33.9	27.6	28.1	29.4	31.4
		S/T	0.96	0.93	0.84	0.68	1.00	0.96	0.87	0.71	1.00	0.99	0.89	0.72	1.00	1.00	0.92	0.75	1.00	1.00	0.96	0.78	1.00	1.00	0.96	0.78
		Δ T	25	24	23	20	25	25	23	20	25	25	23	20	24	24	24	20	23	23	23	20	21	22	22	19
85	**1200**	kW	2.48	2.52	2.59	2.67	2.64	2.69	2.77	2.85	2.79	2.85	2.93	3.02	2.92	2.98	3.07	3.16	3.03	3.09	3.19	3.28	3.13	3.19	3.29	3.39
		/anos	9.8	10.0	10.1	10.3	10.2	10.4	10.6	10.8	10.7	10.9	11.1	11.3	11.1	11.3	11.5	11.8	11.5	11.7	12.0	12.2	12.0	12.1	12.4	12.7
		Hi PR	187	201	212	221	210	226	238	249	238	257	271	283	272	292	309	322	306	329	347	362	338	363	384	400
		Lo PR	97	103	113	120	103	109	119	127	107	113	124	132	112	119	130	138	117	125	136	145	121	129	141	150
		MBh	31.1	31.7	33.2	35.4	30.3	30.9	32.4	34.6	29.6	30.2	31.6	33.7	28.9	29.5	30.9	32.9	27.5	28.0	29.3	31.3	25.4	25.9	27.2	29.0
		S/T	0.93	0.90	0.81	0.66	0.96	0.93	0.84	0.68	0.99	0.95	0.86	0.70	1.00	0.98	0.89	0.72	1.00	1.00	0.92	0.75	1.00	1.00	0.93	0.75
		Δ T	25	25	24	20	26	25	24	21	26	25	24	21	25	25	24	21	24	25	24	20	22	23	22	19
	1050	kW	2.42	2.47	2.54	2.61	2.59	2.64	2.71	2.79	2.73	2.78	2.86	2.95	2.86	2.91	3.00	3.09	2.96	3.02	3.11	3.21	3.06	3.12	3.21	3.31
		/anos	9.7	9.8	10.0	10.2	10.1	10.2	10.4	10.6	10.6	10.7	10.9	11.1	11.0	11.1	11.3	11.6	11.4	11.5	11.7	12.0	11.8	11.9	12.2	12.5
		Hi PR	181	195	206	215	203	219	231	241	231	249	263	274	263	284	299	312	296	319	337	351	327	352	372	388
		Lo PR	94	100	109	116	99	106	115	123	103	110	120	128	109	115	126	134	114	121	132	141	118	125	137	146

IDB: Entering Indoor Dry Bulb Temperature
High and low pressures are measured at the liquid and suction service valves.

Shaded area reflects AHRI conditions
kW = Total system power

Amps = outdoor unit amps (comp.+fan)
Design Subcooling 9 ±3 °F @ the liquid service valve, ARI 95 test conditions

			Outdoor Ambient Temperature																							
			65				75				85				95				105				115			
			Entering Indoor Wet Bulb Temperature																							
IDB	Airflow		59	63	67	71	59	63	67	71	59	63	67	71	59	63	67	71	59	63	67	71	59	63	67	71
70	1225	MBh	36.0	37.3	40.9	-	35.2	36.4	39.9	-	34.3	35.6	39.0	-	33.5	34.7	38.0	-	31.8	33.0	36.1	-	29.5	30.5	33.5	-
		S/T	0.69	0.57	0.40	-	0.71	0.59	0.41	-	0.73	0.61	0.42	-	0.75	0.63	0.44	-	0.78	0.65	0.45	-	0.79	0.66	0.46	-
		ΔT	19	16	12	-	19	16	12	-	19	16	12	-	19	16	12	-	19	16	12	-	17	15	11	-
		kW	2.78	2.84	2.92	-	2.98	3.04	3.13	-	3.15	3.21	3.31	-	3.30	3.37	3.47	-	3.43	3.50	3.61	-	3.54	3.61	3.73	-
		Amps	10.7	10.9	11.2	-	11.5	11.8	12.1	-	12.5	12.7	13.2	-	13.3	13.6	14.0	-	14.1	14.5	14.9	-	14.9	15.3	15.8	-
		Hi PR	209	225	238	-	235	253	267	-	267	288	304	-	304	328	346	-	343	369	389	-	378	407	430	-
		Lo PR	101	107	117	-	106	113	124	-	111	118	129	-	116	124	135	-	122	130	141	-	126	134	146	-
	1400	MBh	39.0	40.4	44.3	-	38.1	39.5	43.3	-	37.2	38.5	42.2	-	36.3	37.6	41.2	-	34.5	35.7	39.1	-	31.9	33.1	36.3	-
		S/T	0.71	0.59	0.41	-	0.74	0.62	0.43	-	0.76	0.63	0.44	-	0.78	0.65	0.45	-	0.81	0.68	0.47	-	0.82	0.68	0.47	-
		ΔT	18	16	12	-	18	16	12	-	18	16	12	-	19	16	12	-	18	16	12	-	17	15	11	-
		kW	2.84	2.90	2.98	-	3.05	3.11	3.20	-	3.22	3.29	3.39	-	3.38	3.45	3.55	-	3.51	3.58	3.70	-	3.63	3.70	3.82	-
		Amps	10.9	11.2	11.6	-	11.8	12.1	12.5	-	12.8	13.1	13.5	-	13.7	14.0	14.4	-	14.5	14.9	15.3	-	15.4	15.7	16.2	-
		Hi PR	216	232	245	-	242	261	275	-	276	297	313	-	314	338	357	-	353	380	401	-	390	420	443	-
		Lo PR	104	111	121	-	110	117	127	-	114	121	132	-	120	127	139	-	126	134	146	-	130	138	151	-
	1575	MBh	40.2	41.6	45.6	-	39.2	40.7	44.6	-	38.3	39.7	43.5	-	37.4	38.7	42.4	-	35.5	36.8	40.3	-	32.9	34.1	37.3	-
		S/T	0.75	0.62	0.43	-	0.77	0.65	0.45	-	0.79	0.66	0.46	-	0.82	0.68	0.47	-	0.85	0.71	0.49	-	0.86	0.72	0.50	-
		ΔT	18	15	11	-	18	15	12	-	18	15	12	-	18	15	12	-	18	15	12	-	16	14	11	-
		kW	2.87	2.92	3.01	-	3.07	3.13	3.22	-	3.25	3.31	3.41	-	3.41	3.48	3.58	-	3.54	3.61	3.73	-	3.66	3.73	3.85	-
		Amps	11.0	11.3	11.7	-	11.9	12.2	12.6	-	12.9	13.2	13.6	-	13.8	14.1	14.6	-	14.6	15.0	15.5	-	15.5	15.9	16.4	-
		Hi PR	218	235	248	-	245	263	278	-	278	300	316	-	317	341	360	-	357	384	405	-	394	424	448	-
		Lo PR	105	112	122	-	111	118	129	-	115	123	134	-	121	129	141	-	127	135	147	-	131	140	152	-
75	1225	MBh	36.6	37.7	40.8	43.8	35.8	36.8	39.9	42.8	34.9	35.9	38.9	41.8	34.1	**35.1**	38.0	40.7	32.4	33.3	36.1	38.7	30.0	30.9	33.4	35.8
		S/T	0.78	0.70	0.53	0.34	0.81	0.72	0.55	0.35	0.83	0.74	0.56	0.36	0.86	**0.77**	0.58	0.37	0.89	0.79	0.60	0.39	0.90	0.80	0.61	0.39
		ΔT	21	20	16	11	22	20	16	11	22	20	16	11	22	**20**	17	11	22	20	16	11	20	19	15	10
		kW	2.80	2.86	2.94	3.03	3.00	3.06	3.15	3.24	3.17	3.24	3.33	3.44	3.33	**3.39**	3.50	3.61	3.46	3.53	3.64	3.75	3.57	3.64	3.76	3.88
		Amps	10.8	11.0	11.3	11.8	11.6	11.9	12.2	12.7	12.6	12.9	13.3	13.8	13.4	**13.7**	14.2	14.7	14.2	14.6	15.1	15.6	15.1	15.4	15.9	16.5
		Hi PR	212	228	240	251	237	256	270	281	270	291	307	320	308	**331**	350	365	346	372	393	410	382	411	434	453
		Lo PR	102	108	118	126	108	114	125	133	112	119	130	138	117	**125**	136	145	123	131	143	152	127	135	148	157
	1400	MBh	39.7	40.8	44.2	47.4	38.7	39.9	43.2	46.3	37.8	38.9	42.2	45.2	36.9	**38.0**	41.1	44.1	35.1	36.1	39.1	41.9	32.5	33.4	36.2	38.8
		S/T	0.81	0.72	0.55	0.35	0.84	0.75	0.57	0.37	0.86	0.77	0.58	0.37	0.89	**0.79**	0.60	0.39	0.92	0.82	0.62	0.40	0.93	0.83	0.63	0.40
		ΔT	21	19	16	11	21	20	16	11	21	20	16	11	22	**20**	16	11	21	20	16	11	20	18	15	10
		kW	2.87	2.92	3.01	3.10	3.07	3.13	3.22	3.32	3.25	3.31	3.41	3.52	3.41	**3.48**	3.58	3.70	3.54	3.61	3.73	3.84	3.66	3.73	3.85	3.97
		Amps	11.0	11.3	11.7	12.1	11.9	12.2	12.6	13.0	12.9	13.2	13.6	14.1	13.8	**14.1**	14.6	15.1	14.6	15.0	15.5	16.1	15.5	15.9	16.4	17.0
		Hi PR	218	235	248	259	245	263	278	290	278	300	316	330	317	**341**	360	376	357	384	405	423	394	424	448	467
		Lo PR	105	112	122	130	111	118	129	137	115	123	134	143	121	**129**	141	150	127	135	147	157	131	140	152	162
	1575	MBh	40.9	42.1	45.5	48.9	39.9	41.1	44.5	47.7	39.0	40.1	43.4	46.6	38.0	**39.1**	42.4	45.5	36.1	37.2	40.2	43.2	33.4	34.4	37.3	40.0
		S/T	0.85	0.76	0.57	0.37	0.88	0.79	0.60	0.38	0.90	0.81	0.61	0.39	0.93	**0.83**	0.63	0.41	0.97	0.86	0.65	0.42	0.97	0.87	0.66	0.42
		ΔT	20	19	15	11	20	19	15	11	21	19	15	11	21	**19**	16	11	20	19	15	11	19	18	14	10
		kW	2.89	2.94	3.03	3.12	3.09	3.15	3.25	3.35	3.27	3.34	3.44	3.55	3.43	**3.50**	3.61	3.72	3.57	3.64	3.76	3.87	3.68	3.76	3.88	4.00
		Amps	11.1	11.4	11.8	12.2	12.0	12.3	12.7	13.2	13.0	13.3	13.8	14.3	13.9	**14.2**	14.7	15.2	14.8	15.1	15.6	16.2	15.6	16.0	16.5	17.2
		Hi PR	220	237	250	261	247	266	281	293	281	303	320	333	320	**345**	364	380	360	388	409	427	398	428	452	472
		Lo PR	106	113	123	131	112	119	130	139	116	124	135	144	122	**130**	142	151	128	136	149	158	133	141	154	164

IDB: Entering Indoor Dry Bulb Temperature

Shaded area reflects ACCA (TVA) conditions

Amps = outdoor unit amps (comp.+fan)

High and low pressures are measured at the liquid and suction service valves.

kW = Total system power

Expanded Expanded Cooling Data — ASX130421** (cont.)

			Outdoor Ambient Temperature																							
			65				75				85				95				105				115			
			Entering Indoor Wet Bulb Temperature																							
IDB	Airflow		59	63	67	71	59	63	67	71	59	63	67	71	59	63	67	71	59	63	67	71	59	63	67	71
80	1225	MBh	37.3	38.1	40.7	43.5	36.4	37.2	39.7	42.5	35.5	36.3	38.8	41.5	34.7	35.4	37.8	40.5	32.9	33.6	36.0	38.4	30.5	31.2	33.3	35.6
		S/T	0.86	0.80	0.65	0.49	0.89	0.83	0.68	0.51	0.91	0.85	0.69	0.52	0.94	0.88	0.72	0.54	0.97	0.91	0.74	0.56	0.98	0.92	0.75	0.56
		ΔT	24	23	20	16	24	23	20	16	24	23	20	16	24	23	20	16	24	23	20	16	22	22	19	15
		kW	2.82	2.88	2.96	3.05	3.02	3.08	3.17	3.27	3.20	3.26	3.36	3.46	3.35	3.42	3.53	3.64	3.48	3.56	3.67	3.78	3.60	3.67	3.79	3.91
		Amps	10.8	11.1	11.4	11.9	11.7	12.0	12.4	12.8	12.7	13.0	13.4	13.9	13.5	13.8	14.3	14.8	14.4	14.7	15.2	15.8	15.2	15.6	16.1	16.7
		Hi PR	214	230	243	253	240	258	273	284	273	294	310	323	311	334	353	368	350	376	397	414	386	416	439	458
		Lo PR	103	109	119	127	109	116	126	134	113	120	131	140	119	126	138	147	124	132	144	154	129	137	149	159
	1400	MBh	40.4	41.3	44.1	47.1	39.4	40.3	43.1	46.0	38.5	39.3	42.0	44.9	37.6	38.4	**41.0**	43.8	35.7	36.5	39.0	41.6	33.0	33.8	36.1	38.6
		S/T	0.89	0.83	0.68	0.51	0.92	0.86	0.70	0.52	0.94	0.88	0.72	0.54	0.97	0.91	**0.74**	0.56	1.00	0.95	0.77	0.58	1.00	0.96	0.78	0.58
		ΔT	24	23	20	16	24	23	20	16	24	23	20	16	24	23	**20**	16	23	23	20	16	22	21	18	15
		kW	2.89	2.94	3.03	3.12	3.09	3.15	3.25	3.35	3.27	3.34	3.44	3.55	3.43	3.50	**3.61**	3.72	3.57	3.64	3.76	3.88	3.68	3.76	3.88	4.01
		Amps	11.1	11.4	11.8	12.2	12.0	12.3	12.7	13.2	13.0	13.3	13.8	14.3	13.9	14.2	**14.7**	15.2	14.8	15.1	15.6	16.2	15.6	16.0	16.5	17.2
		Hi PR	220	237	250	261	247	266	281	293	281	303	320	333	320	345	**364**	380	360	388	410	427	398	428	452	472
		Lo PR	106	113	123	131	112	119	130	139	116	124	135	144	122	130	**142**	151	128	136	149	158	133	141	154	164
	1575	MBh	41.6	42.5	45.4	48.5	40.6	41.5	44.3	47.4	39.6	40.5	43.3	46.3	38.7	39.5	42.2	45.1	36.7	37.6	40.1	42.9	34.0	34.8	37.2	39.7
		S/T	0.93	0.87	0.71	0.53	0.96	0.90	0.74	0.55	1.00	0.93	0.75	0.56	1.00	0.96	0.78	0.58	1.00	1.00	0.81	0.60	1.00	1.00	0.82	0.61
		ΔT	23	22	19	15	23	22	19	15	23	22	19	15	23	22	19	15	21	22	19	15	20	20	18	14
		kW	2.91	2.96	3.05	3.14	3.11	3.18	3.27	3.37	3.30	3.36	3.47	3.58	3.46	3.53	3.64	3.75	3.60	3.67	3.79	3.91	3.71	3.79	3.91	4.04
		Amps	11.2	11.5	11.9	12.3	12.1	12.4	12.8	13.3	13.1	13.5	13.9	14.4	14.0	14.4	14.8	15.4	14.9	15.3	15.8	16.4	15.8	16.2	16.7	17.3
		Hi PR	223	240	253	264	250	269	284	296	284	306	323	337	324	348	368	383	364	392	414	431	402	433	457	477
		Lo PR	107	114	124	132	113	120	131	140	118	125	137	145	123	131	143	153	129	138	150	160	134	142	155	166
85	1225	MBh	37.9	38.6	40.5	43.2	37.0	37.7	39.5	42.2	36.2	36.9	38.6	41.2	35.3	36.0	37.7	40.2	33.5	34.2	35.8	38.2	31.0	31.6	33.1	35.4
		S/T	0.90	0.87	0.78	0.63	0.93	0.90	0.81	0.66	0.95	0.92	0.83	0.67	0.98	0.95	0.86	0.70	1.00	0.99	0.89	0.72	1.00	0.99	0.90	0.73
		ΔT	26	25	24	21	26	25	24	21	26	25	24	21	26	26	24	21	25	25	24	21	23	24	22	19
		kW	2.84	2.90	2.98	3.07	3.04	3.11	3.20	3.29	3.22	3.29	3.39	3.49	3.38	3.45	3.55	3.66	3.51	3.58	3.70	3.81	3.63	3.70	3.82	3.94
		Amps	10.9	11.2	11.6	12.0	11.8	12.1	12.5	12.9	12.8	13.1	13.5	14.0	13.6	14.0	14.4	15.0	14.5	14.9	15.3	15.9	15.4	15.7	16.2	16.8
		Hi PR	216	232	245	256	242	261	275	287	276	297	313	327	314	338	357	372	353	380	401	418	390	420	443	462
		Lo PR	104	110	121	128	110	117	127	136	114	121	132	141	120	127	139	148	126	134	146	155	130	138	151	161
	1400	MBh	41.1	41.9	43.9	46.8	40.1	40.9	42.8	45.7	39.2	39.9	41.8	44.6	38.2	39.0	40.8	43.5	36.3	37.0	38.8	41.3	33.6	34.3	35.9	38.3
		S/T	0.93	0.90	0.81	0.66	0.96	0.93	0.84	0.68	0.99	0.95	0.86	0.70	1.00	0.98	0.89	0.72	1.00	1.00	0.92	0.75	1.00	1.00	0.93	0.75
		ΔT	25	25	23	20	25	25	24	20	25	25	24	20	25	25	24	21	24	24	23	20	22	23	22	19
		kW	2.91	2.96	3.05	3.14	3.11	3.18	3.27	3.37	3.30	3.36	3.47	3.58	3.46	3.53	3.64	3.75	3.60	3.67	3.79	3.91	3.71	3.79	3.91	4.04
		Amps	11.2	11.5	11.9	12.3	12.1	12.4	12.8	13.3	13.1	13.5	13.9	14.4	14.0	14.4	14.8	15.4	14.9	15.3	15.8	16.4	15.8	16.2	16.7	17.3
		Hi PR	223	240	253	264	250	269	284	296	284	306	323	337	324	348	368	383	364	392	414	431	402	433	457	477
		Lo PR	107	114	124	132	113	120	131	140	118	125	137	145	123	131	143	153	129	138	150	160	134	142	155	166
	1575	MBh	42.3	43.1	45.2	48.2	41.3	42.1	44.1	47.1	40.3	41.1	43.1	45.9	39.4	40.1	42.0	44.8	37.4	38.1	39.9	42.6	34.6	35.3	37.0	39.4
		S/T	0.98	0.94	0.85	0.69	1.00	0.98	0.88	0.71	1.00	1.00	0.90	0.73	1.00	1.00	0.93	0.76	1.00	1.00	0.97	0.78	1.00	1.00	0.98	0.79
		ΔT	24	24	22	19	24	24	23	20	24	24	23	20	23	23	23	20	22	22	23	20	20	21	21	18
		kW	2.93	2.99	3.07	3.17	3.14	3.20	3.30	3.40	3.32	3.39	3.49	3.60	3.49	3.56	3.67	3.78	3.62	3.70	3.82	3.94	3.74	3.82	3.94	4.07
		Amps	11.3	11.6	12.0	12.4	12.2	12.5	12.9	13.4	13.3	13.6	14.0	14.5	14.2	14.5	15.0	15.5	15.0	15.4	15.9	16.5	15.9	16.3	16.9	17.5
		Hi PR	225	242	255	266	252	271	287	299	287	309	326	340	327	352	371	387	368	396	418	436	406	437	462	481
		Lo PR	108	115	126	134	114	122	133	141	119	126	138	147	125	133	145	154	131	139	152	162	135	144	157	167

IDB: Entering Indoor Dry Bulb Temperature

Shaded area reflects AHRI conditions

Amps = outdoor unit amps (comp.+fan)

High and low pressures are measured at the liquid and suction service valves.

kW = Total system power

			Outdoor Ambient Temperature																							
			65				75				85				95				105				115			
			Entering Indoor Wet Bulb Temperature																							
IDB	Airflow		59	63	67	71	59	63	67	71	59	63	67	71	59	63	67	71	59	63	67	71	59	63	67	71
70	1400	MBh	40.4	41.9	45.9	-	39.5	40.9	44.8	-	38.5	39.9	43.7	-	37.6	38.9	42.7	-	35.7	37.0	40.5	-	33.1	34.3	37.5	-
		S/T	0.71	0.59	0.41	-	0.73	0.61	0.42	-	0.75	0.63	0.44	-	0.78	0.65	0.45	-	0.81	0.67	0.47	-	0.81	0.68	0.47	-
		ΔT	19	16	12	-	19	16	12	-	19	16	13	-	19	17	13	-	19	16	12	-	18	15	12	-
		kW	3.17	3.23	3.32	-	3.39	3.46	3.56	-	3.59	3.66	3.77	-	3.77	3.84	3.96	-	3.91	4.00	4.12	-	4.04	4.13	4.26	-
		Amps	11.6	11.9	12.3	-	12.6	12.9	13.3	-	13.7	14.0	14.5	-	14.6	15.0	15.5	-	15.5	15.9	16.5	-	16.5	16.9	17.4	-
		Hi PR	215	231	244	-	241	259	274	-	274	295	311	-	312	336	354	-	351	377	399	-	388	417	440	-
		Lo PR	104	111	121	-	110	117	128	-	115	122	133	-	120	128	140	-	126	134	146	-	130	139	151	-
	1600	MBh	43.8	45.4	49.7	-	42.7	44.3	48.5	-	41.7	43.2	47.4	-	40.7	42.2	46.2	-	38.7	40.1	43.9	-	35.8	37.1	40.7	-
		S/T	0.73	0.61	0.43	-	0.76	0.64	0.44	-	0.78	0.65	0.45	-	0.81	0.67	0.47	-	0.84	0.70	0.48	-	0.84	0.70	0.49	-
		ΔT	18	16	12	-	19	16	12	-	19	16	12	-	19	16	12	-	19	16	12	-	17	15	11	-
		kW	3.24	3.30	3.40	-	3.47	3.54	3.65	-	3.67	3.75	3.87	-	3.86	3.94	4.06	-	4.01	4.09	4.22	-	4.14	4.23	4.36	-
		Amps	12.0	12.3	12.7	-	12.9	13.2	13.7	-	14.1	14.4	14.9	-	15.0	15.4	15.9	-	16.0	16.4	16.9	-	16.9	17.4	17.9	-
		Hi PR	221	238	251	-	248	267	282	-	282	304	321	-	321	346	365	-	362	389	411	-	400	430	454	-
		Lo PR	108	114	125	-	114	121	132	-	118	126	137	-	124	132	144	-	130	138	151	-	134	143	156	-
	1800	MBh	45.1	46.7	51.2	-	44.0	45.6	50.0	-	43.0	44.5	48.8	-	41.9	43.5	47.6	-	39.8	41.3	45.2	-	36.9	38.2	41.9	-
		S/T	0.77	0.64	0.45	-	0.80	0.67	0.46	-	0.82	0.68	0.47	-	0.85	0.71	0.49	-	0.88	0.73	0.51	-	0.88	0.74	0.51	-
		ΔT	18	15	12	-	18	16	12	-	18	16	12	-	18	16	12	-	18	15	12	-	17	14	11	-
		kW	3.26	3.33	3.42	-	3.50	3.57	3.67	-	3.70	3.78	3.90	-	3.89	3.97	4.09	-	4.04	4.13	4.26	-	4.18	4.26	4.40	-
		Amps	12.1	12.4	12.8	-	13.0	13.4	13.8	-	14.2	14.5	15.0	-	15.2	15.5	16.0	-	16.1	16.5	17.1	-	17.1	17.5	18.1	-
		Hi PR	223	240	254	-	251	270	285	-	285	307	324	-	325	349	369	-	365	393	415	-	404	434	459	-
		Lo PR	109	116	126	-	115	122	133	-	119	127	139	-	125	133	146	-	131	140	152	-	136	144	158	-
75	1400	MBh	41.1	42.3	45.8	49.1	40.1	41.3	44.7	48.0	39.2	40.3	43.7	46.8	38.2	**39.3**	42.6	45.7	36.3	37.4	40.5	43.4	33.6	34.6	37.5	40.2
		S/T	0.81	0.72	0.55	0.35	0.83	0.75	0.56	0.36	0.86	0.77	0.58	0.37	0.88	**0.79**	0.60	0.38	0.92	0.82	0.62	0.40	0.92	0.83	0.63	0.40
		ΔT	22	20	16	11	22	20	17	11	22	20	17	11	22	**20**	17	12	22	20	16	11	20	19	15	11
		kW	3.19	3.25	3.35	3.45	3.42	3.49	3.59	3.70	3.62	3.69	3.80	3.92	3.79	**3.87**	3.99	4.12	3.95	4.03	4.15	4.29	4.08	4.16	4.29	4.43
		Amps	11.7	12.0	12.4	12.9	12.7	13.0	13.4	13.9	13.8	14.1	14.6	15.1	14.7	**15.1**	15.6	16.2	15.7	16.1	16.6	17.2	16.6	17.0	17.6	18.3
		Hi PR	217	233	246	257	243	262	276	288	277	298	314	328	315	**339**	358	373	354	381	403	420	391	421	445	464
		Lo PR	105	112	122	130	111	118	129	138	116	123	134	143	122	**129**	141	150	127	136	148	158	132	140	153	163
	1600	MBh	44.5	45.8	49.6	53.2	43.5	44.8	48.4	52.0	42.4	43.7	47.3	50.8	41.4	**42.6**	46.1	49.5	39.3	40.5	43.8	47.0	36.4	37.5	40.6	43.6
		S/T	0.84	0.75	0.57	0.36	0.87	0.77	0.59	0.38	0.89	0.79	0.60	0.39	0.92	**0.82**	0.62	0.40	0.95	0.85	0.64	0.41	0.96	0.86	0.65	0.42
		ΔT	21	20	16	11	22	20	16	11	22	20	16	11	22	**20**	16	11	21	20	16	11	20	18	15	10
		kW	3.26	3.33	3.42	3.53	3.50	3.57	3.68	3.79	3.70	3.78	3.90	4.02	3.89	**3.97**	4.09	4.22	4.04	4.13	4.26	4.39	4.18	4.26	4.40	4.54
		Amps	12.1	12.4	12.8	13.2	13.1	13.4	13.8	14.3	14.2	14.5	15.0	15.6	15.2	**15.5**	16.1	16.7	16.1	16.5	17.1	17.7	17.1	17.5	18.1	18.8
		Hi PR	223	240	254	265	251	270	285	297	285	307	324	338	325	**349**	369	385	365	393	415	433	404	434	459	478
		Lo PR	109	116	126	134	115	122	133	142	119	127	139	148	125	**133**	146	155	131	140	153	162	136	145	158	168
	1800	MBh	45.8	47.2	51.1	54.8	44.8	46.1	49.9	53.6	43.7	45.0	48.7	52.3	42.6	**43.9**	47.5	51.0	40.5	41.7	45.1	48.5	37.5	38.6	41.8	44.9
		S/T	0.88	0.78	0.59	0.38	0.91	0.81	0.61	0.40	0.93	0.83	0.63	0.41	0.96	**0.86**	0.65	0.42	1.00	0.89	0.67	0.43	1.00	0.90	0.68	0.44
		ΔT	21	19	15	11	21	19	16	11	21	19	16	11	21	**19**	16	11	21	19	16	11	19	18	15	10
		kW	3.29	3.35	3.45	3.55	3.52	3.59	3.70	3.82	3.73	3.81	3.93	4.05	3.92	**4.00**	4.12	4.26	4.07	4.16	4.29	4.43	4.21	4.30	4.44	4.58
		Amps	12.2	12.5	12.9	13.4	13.2	13.5	13.9	14.5	14.3	14.7	15.1	15.7	15.3	**15.7**	16.2	16.8	16.3	16.7	17.2	17.9	17.3	17.7	18.3	19.0
		Hi PR	226	243	256	267	253	272	288	300	288	310	327	341	328	**353**	373	389	369	397	419	437	408	439	463	483
		Lo PR	110	117	127	136	116	123	135	143	120	128	140	149	127	**135**	147	157	133	141	154	164	137	146	159	170

IDB: Entering Indoor Dry Bulb Temperature

Shaded area reflects ACCA (TVA) conditions

Amps = outdoor unit amps (comp.+fan)

High and low pressures are measured at the liquid and suction service valves.

kW = Total system power

Expanded Cooling Data — ASX130481** (cont.)

			Outdoor Ambient Temperature																							
			65				75				85				95				105				115			
			Entering Indoor Wet Bulb Temperature																							
IDB	Airflow		59	63	67	71	59	63	67	71	59	63	67	71	59	63	67	71	59	63	67	71	59	63	67	71
80	1400	MBh	41.8	42.7	45.6	48.8	40.8	41.7	44.6	47.7	39.9	40.7	43.5	46.5	38.9	39.7	42.5	45.4	36.9	37.8	40.3	43.1	34.2	35.0	37.4	39.9
		S/T	0.88	0.83	0.67	0.50	0.92	0.86	0.70	0.52	0.94	0.88	0.72	0.54	0.97	0.91	0.74	0.55	1.01	0.94	0.77	0.57	1.01	0.95	0.77	0.58
		ΔT	24	23	20	16	25	24	20	16	25	24	20	16	25	24	21	16	24	23	20	16	23	22	19	15
		kW	3.21	3.28	3.37	3.47	3.44	3.51	3.62	3.73	3.65	3.72	3.83	3.95	3.82	3.90	4.03	4.15	3.98	4.06	4.19	4.32	4.11	4.20	4.33	4.47
		Amps	11.9	12.1	12.5	13.0	12.8	13.1	13.6	14.1	13.9	14.3	14.7	15.3	14.9	15.2	15.8	16.3	15.8	16.2	16.8	17.4	16.8	17.2	17.8	18.5
		Hi PR	219	236	249	259	246	264	279	291	279	301	317	331	318	342	362	377	358	385	407	424	395	426	449	469
		Lo PR	106	113	124	132	112	120	131	139	117	124	136	145	123	131	143	152	129	137	149	159	133	142	155	165
	1600	MBh	45.3	46.3	49.5	52.9	44.2	45.2	48.3	51.6	43.2	44.1	47.2	50.4	42.1	43.1	**46.0**	49.2	40.0	40.9	43.7	46.7	37.1	37.9	40.5	43.3
		S/T	0.92	0.86	0.70	0.52	0.95	0.89	0.72	0.54	0.97	0.91	0.74	0.56	1.00	0.94	**0.77**	0.57	1.00	0.98	0.80	0.60	1.00	0.99	0.80	0.60
		ΔT	24	23	20	16	24	23	20	16	24	23	20	16	24	23	**20**	16	23	23	20	16	21	21	19	15
		kW	3.29	3.35	3.45	3.56	3.52	3.59	3.70	3.82	3.73	3.81	3.93	4.05	3.92	4.00	**4.12**	4.26	4.07	4.16	4.29	4.43	4.21	4.30	4.44	4.58
		Amps	12.2	12.5	12.9	13.4	13.2	13.5	13.9	14.5	14.3	14.7	15.2	15.7	15.3	15.7	**16.2**	16.8	16.3	16.7	17.3	17.9	17.3	17.7	18.3	19.0
		Hi PR	226	243	256	267	253	272	288	300	288	310	327	341	328	353	**373**	389	369	397	419	437	408	439	463	483
		Lo PR	110	117	127	136	116	123	135	143	120	128	140	149	127	135	**147**	157	133	141	154	164	137	146	159	170
	1800	MBh	46.7	47.7	50.9	54.4	45.6	46.6	49.7	53.2	44.5	45.5	48.6	51.9	43.4	44.3	47.4	50.6	41.2	42.1	45.0	48.1	38.2	39.0	41.7	44.6
		S/T	0.96	0.90	0.73	0.55	1.00	0.93	0.76	0.57	1.00	0.96	0.78	0.58	1.00	1.00	0.80	0.60	1.00	1.00	0.83	0.62	1.00	1.00	0.84	0.63
		ΔT	23	22	19	15	23	22	19	15	23	22	19	15	22	23	19	16	21	22	19	15	20	20	18	14
		kW	3.31	3.38	3.48	3.58	3.55	3.62	3.73	3.85	3.76	3.84	3.96	4.08	3.95	4.03	4.16	4.29	4.11	4.19	4.33	4.47	4.24	4.33	4.47	4.62
		Amps	12.3	12.6	13.0	13.5	13.3	13.6	14.1	14.6	14.4	14.8	15.3	15.9	15.4	15.8	16.4	17.0	16.4	16.8	17.4	18.1	17.4	17.9	18.5	19.2
		Hi PR	228	245	259	270	256	275	291	303	291	313	331	345	331	356	376	393	373	401	423	442	412	443	468	488
		Lo PR	111	118	129	137	117	125	136	145	122	129	141	151	128	136	148	158	134	143	156	166	139	147	161	171
85	1400	MBh	42.5	43.4	45.4	48.5	41.5	42.4	44.4	47.3	40.6	41.3	43.3	46.2	39.6	40.3	42.2	45.1	37.6	38.3	40.1	42.8	34.8	35.5	37.2	39.7
		S/T	0.93	0.89	0.81	0.65	0.96	0.93	0.84	0.68	0.98	0.95	0.86	0.70	1.00	0.98	0.88	0.72	1.00	1.00	0.92	0.74	1.00	1.00	0.93	0.75
		ΔT	26	25	24	21	26	26	24	21	26	26	24	21	26	26	25	21	25	25	24	21	23	23	23	20
		kW	3.24	3.30	3.40	3.50	3.47	3.54	3.65	3.76	3.67	3.75	3.86	3.99	3.85	3.94	4.06	4.19	4.01	4.09	4.22	4.36	4.14	4.23	4.36	4.50
		Amps	12.0	12.2	12.6	13.1	12.9	13.2	13.7	14.2	14.0	14.4	14.9	15.4	15.0	15.4	15.9	16.5	16.0	16.4	16.9	17.6	16.9	17.4	17.9	18.6
		Hi PR	221	238	251	262	248	267	282	294	282	304	321	334	321	346	365	381	361	389	411	428	399	430	454	473
		Lo PR	108	114	125	133	114	121	132	140	118	126	137	146	124	132	144	153	130	138	151	161	134	143	156	166
	1600	MBh	46.1	47.0	49.2	52.5	45.0	45.9	48.1	51.3	43.9	44.8	46.9	50.1	42.9	43.7	45.8	48.8	40.7	41.5	43.5	46.4	37.7	38.5	40.3	43.0
		S/T	0.96	0.93	0.84	0.68	1.00	0.96	0.87	0.70	1.00	0.98	0.89	0.72	1.00	1.00	0.92	0.74	1.00	1.00	0.95	0.77	1.00	1.00	0.96	0.78
		ΔT	25	25	24	20	26	25	24	21	25	25	24	21	25	25	24	21	23	24	24	21	22	22	22	19
		kW	3.31	3.38	3.48	3.58	3.55	3.62	3.73	3.85	3.76	3.84	3.96	4.08	3.95	4.03	4.16	4.29	4.11	4.19	4.33	4.47	4.24	4.33	4.47	4.62
		Amps	12.3	12.6	13.0	13.5	13.3	13.6	14.1	14.6	14.4	14.8	15.3	15.9	15.4	15.8	16.4	17.0	16.4	16.8	17.4	18.1	17.4	17.9	18.5	19.2
		Hi PR	228	245	259	270	256	275	291	303	291	313	331	345	331	356	376	393	373	401	423	442	412	443	468	488
		Lo PR	111	118	129	137	117	125	136	145	122	129	141	151	128	136	148	158	134	143	156	166	139	147	161	171
	1800	MBh	47.5	48.4	50.7	54.1	46.4	47.3	49.5	52.8	45.3	46.1	48.3	51.6	44.2	45.0	47.1	50.3	42.0	42.8	44.8	47.8	38.9	39.6	41.5	44.3
		S/T	1.00	0.97	0.88	0.71	1.00	1.00	0.91	0.74	1.00	1.00	0.93	0.76	1.00	1.00	0.96	0.78	1.00	1.00	1.00	0.81	1.00	1.00	1.00	0.82
		ΔT	24	24	23	20	24	24	23	20	23	24	23	20	23	23	23	20	21	22	23	20	20	20	21	18
		kW	3.34	3.40	3.50	3.61	3.58	3.65	3.76	3.88	3.79	3.87	3.99	4.11	3.98	4.06	4.19	4.32	4.14	4.23	4.36	4.50	4.28	4.37	4.51	4.65
		Amps	12.4	12.7	13.1	13.6	13.4	13.7	14.2	14.7	14.6	14.9	15.4	16.0	15.6	16.0	16.5	17.1	16.6	17.0	17.6	18.2	17.6	18.0	18.6	19.3
		Hi PR	230	248	262	273	258	278	294	306	294	316	334	348	335	360	380	397	376	405	428	446	416	448	473	493
		Lo PR	112	119	130	138	118	126	137	146	123	131	143	152	129	137	150	160	135	144	157	167	140	149	163	173

IDB: Entering Indoor Dry Bulb Temperature

Shaded area reflects AHRI conditions

Amps = outdoor unit amps (comp.+fan)

High and low pressures are measured at the liquid and suction service valves.

kW = Total system power

			Outdoor Ambient Temperature																							
			65				75				85				95				105				115			
			Entering Indoor Wet Bulb Temperature																							
IDB	Airflow		59	63	67	71	59	63	67	71	59	63	67	71	59	63	67	71	59	63	67	71	59	63	67	71
70	1500	MBh	50.1	51.9	56.8	-	48.9	50.7	55.5	-	47.7	49.5	54.2	-	46.6	48.3	52.9	-	44.2	45.8	50.2	-	41.0	42.5	46.5	-
		S/T	0.67	0.56	0.39	-	0.69	0.58	0.40	-	0.71	0.59	0.41	-	0.73	0.61	0.42	-	0.76	0.64	0.44	-	0.77	0.64	0.44	-
		ΔT	21	18	13	-	21	18	14	-	21	18	14	-	21	18	14	-	21	18	14	-	19	17	13	-
		kW	3.87	3.95	4.07	-	4.16	4.24	4.38	-	4.41	4.50	4.65	-	4.63	4.73	4.89	-	4.82	4.93	5.09	-	4.99	5.10	5.26	-
		Amps	14.4	14.8	15.3	-	15.6	16.0	16.5	-	17.0	17.4	18.0	-	18.2	18.6	19.2	-	19.3	19.8	20.5	-	20.5	21.0	21.7	-
		HI PR	229	246	260	-	257	276	292	-	292	314	332	-	333	358	378	-	374	403	425	-	413	445	470	-
		LO PR	101	108	118	-	107	114	125	-	111	119	129	-	117	125	136	-	123	130	142	-	127	135	147	-
	1750	MBh	54.2	56.2	61.6	-	53.0	54.9	60.1	-	51.7	53.6	58.7	-	50.4	52.3	57.3	-	47.9	49.7	54.4	-	44.4	46.0	50.4	-
		S/T	0.69	0.58	0.40	-	0.72	0.60	0.42	-	0.74	0.62	0.43	-	0.76	0.64	0.44	-	0.79	0.66	0.46	-	0.80	0.66	0.46	-
		ΔT	20	17	13	-	20	17	13	-	20	17	13	-	20	17	13	-	20	17	13	-	19	16	12	-
		kW	3.96	4.04	4.17	-	4.26	4.35	4.48	-	4.52	4.62	4.76	-	4.75	4.85	5.01	-	4.95	5.05	5.22	-	5.12	5.23	5.40	-
		Amps	14.8	15.2	15.7	-	16.1	16.4	17.0	-	17.5	17.9	18.5	-	18.7	19.1	19.8	-	19.9	20.4	21.1	-	21.1	21.6	22.4	-
		HI PR	236	254	268	-	265	285	301	-	301	324	342	-	343	369	390	-	386	415	438	-	426	459	484	-
		LO PR	105	111	122	-	111	118	128	-	115	122	133	-	121	128	140	-	126	135	147	-	131	139	152	-
	2000	MBh	55.9	57.9	63.4	-	54.6	56.5	62.0	-	53.3	55.2	60.5	-	52.0	53.9	59.0	-	49.4	51.2	56.1	-	45.7	47.4	51.9	-
		S/T	0.73	0.61	0.42	-	0.75	0.63	0.44	-	0.77	0.65	0.45	-	0.80	0.67	0.46	-	0.83	0.69	0.48	-	0.83	0.70	0.48	-
		ΔT	19	16	12	-	19	16	12	-	19	16	12	-	19	16	13	-	19	16	12	-	18	15	12	-
		kW	3.99	4.07	4.20	-	4.29	4.38	4.52	-	4.56	4.65	4.80	-	4.79	4.89	5.05	-	4.99	5.10	5.26	-	5.16	5.27	5.44	-
		Amps	15.0	15.3	15.8	-	16.2	16.6	17.2	-	17.6	18.1	18.7	-	18.9	19.3	20.0	-	20.1	20.6	21.3	-	21.3	21.8	22.6	-
		HI PR	238	256	271	-	267	288	304	-	304	327	346	-	346	373	394	-	390	419	443	-	430	463	489	-
		LO PR	106	112	123	-	112	119	130	-	116	123	135	-	122	130	142	-	128	136	148	-	132	141	153	-
75	1500	MBh	50.9	52.4	56.7	60.9	49.7	51.2	55.4	59.5	48.5	50.0	54.1	58.1	47.3	**48.8**	52.8	56.6	45.0	46.3	50.1	53.8	41.7	42.9	46.4	49.8
		S/T	0.76	0.68	0.51	0.33	0.79	0.70	0.53	0.34	0.81	0.72	0.55	0.35	0.83	**0.75**	0.56	0.36	0.87	0.77	0.59	0.38	0.87	0.78	0.59	0.38
		ΔT	24	22	18	12	24	22	18	13	24	22	18	13	24	**22**	18	13	24	22	18	12	22	21	17	12
		kW	3.90	3.98	4.10	4.23	4.19	4.28	4.41	4.55	4.45	4.54	4.68	4.84	4.67	**4.77**	4.93	5.09	4.86	4.97	5.13	5.30	5.03	5.14	5.31	5.48
		Amps	14.6	14.9	15.4	16.0	15.8	16.1	16.7	17.3	17.1	17.6	18.1	18.8	18.3	**18.8**	19.4	20.2	19.5	20.0	20.7	21.5	20.7	21.2	21.9	22.8
		HI PR	231	249	263	274	259	279	295	307	295	317	335	350	336	**362**	382	398	378	407	430	448	418	449	475	495
		LO PR	103	109	119	127	108	115	126	134	113	120	131	139	118	**126**	137	146	124	132	144	153	128	136	149	159
	1750	MBh	55.1	56.8	61.5	66.0	53.9	55.5	60.0	64.4	52.6	54.1	58.6	62.9	51.3	**52.8**	57.2	61.4	48.7	50.2	54.3	58.3	45.1	46.5	50.3	54.0
		S/T	0.79	0.71	0.53	0.34	0.82	0.73	0.55	0.36	0.84	0.75	0.57	0.36	0.86	**0.77**	0.59	0.38	0.90	0.80	0.61	0.39	0.91	0.81	0.61	0.39
		ΔT	23	21	17	12	23	21	17	12	23	21	17	12	23	**21**	18	12	23	21	17	12	21	20	16	11
		kW	3.99	4.07	4.20	4.33	4.29	4.38	4.52	4.66	4.56	4.65	4.80	4.96	4.79	**4.89**	5.05	5.22	4.99	5.10	5.26	5.44	5.16	5.27	5.44	5.63
		Amps	15.0	15.3	15.8	16.4	16.2	16.6	17.2	17.8	17.6	18.1	18.7	19.4	18.9	**19.3**	20.0	20.8	20.1	20.6	21.3	22.1	21.3	21.8	22.6	23.5
		HI PR	238	256	271	282	267	288	304	317	304	327	346	360	346	**373**	394	411	390	419	443	462	431	463	489	510
		LO PR	106	112	123	131	112	119	130	138	116	123	135	144	122	**130**	142	151	128	136	148	158	132	141	153	163
	2000	MBh	56.8	58.5	63.3	67.9	55.5	57.1	61.8	66.4	54.2	55.8	60.4	64.8	52.8	**54.4**	58.9	63.2	50.2	51.7	55.9	60.0	46.5	47.9	51.8	55.6
		S/T	0.83	0.74	0.56	0.36	0.86	0.77	0.58	0.37	0.88	0.79	0.59	0.38	0.91	**0.81**	0.61	0.39	0.94	0.84	0.64	0.41	0.95	0.85	0.64	0.41
		ΔT	22	20	16	11	22	20	16	11	22	20	16	11	22	**20**	17	11	22	20	16	11	20	19	15	11
		kW	4.02	4.11	4.23	4.37	4.33	4.42	4.56	4.70	4.59	4.69	4.84	5.00	4.83	**4.93**	5.09	5.26	5.03	5.14	5.31	5.48	5.20	5.32	5.49	5.67
		Amps	15.1	15.5	16.0	16.6	16.4	16.8	17.3	18.0	17.8	18.2	18.8	19.6	19.0	**19.5**	20.2	20.9	20.3	20.8	21.5	22.3	21.5	22.0	22.8	23.7
		HI PR	241	259	274	285	270	291	307	320	307	331	349	364	350	**376**	398	415	394	424	447	466	435	468	494	515
		LO PR	107	114	124	132	113	120	131	139	117	125	136	145	123	**131**	143	152	129	137	150	160	133	142	155	165

IDB: Entering Indoor Dry Bulb Temperature

Shaded area reflects ACCA (TVA) conditions

Amps = outdoor unit amps (comp.+fan)

High and low pressures are measured at the liquid and suction service valves.

kW = Total system power

Expanded Cooling Data — ASX130601** (cont.)

			Outdoor Ambient Temperature																							
			65				75				85				95				105				115			
			Entering Indoor Wet Bulb Temperature																							
IDB	Airflow		59	63	67	71	59	63	67	71	59	63	67	71	59	63	67	71	59	63	67	71	59	63	67	71
80	1500	MBh	51.8	52.9	56.6	60.5	50.6	51.7	55.2	59.1	49.4	50.5	53.9	57.6	48.2	49.2	52.6	56.2	45.8	46.8	50.0	53.4	42.4	43.3	46.3	49.5
		S/T	0.83	0.78	0.64	0.48	0.86	0.81	0.66	0.49	0.89	0.83	0.68	0.51	0.91	0.86	0.70	0.52	0.95	0.89	0.72	0.54	0.96	0.90	0.73	0.55
		ΔT	26	25	22	18	27	26	22	18	27	26	22	18	27	26	23	18	27	26	22	18	25	24	21	17
		kW	3.93	4.01	4.13	4.26	4.22	4.31	4.45	4.59	4.48	4.58	4.72	4.88	4.71	4.81	4.97	5.13	4.90	5.01	5.17	5.34	5.07	5.18	5.35	5.53
		Amps	14.7	15.1	15.6	16.1	15.9	16.3	16.8	17.5	17.3	17.7	18.3	19.0	18.5	19.0	19.6	20.4	19.7	20.2	20.9	21.7	20.9	21.4	22.2	23.0
		HI PR	234	251	265	277	262	282	298	311	298	321	339	353	339	365	386	402	382	411	434	453	422	454	479	500
		LO PR	104	110	120	128	109	116	127	135	114	121	132	141	119	127	139	148	125	133	145	155	129	138	150	160
	1750	MBh	56.1	57.4	61.3	65.5	54.8	56.0	59.9	64.0	53.5	54.7	58.4	62.5	52.2	53.4	**57.0**	60.9	49.6	50.7	54.2	57.9	45.9	46.9	50.2	53.6
		S/T	0.86	0.81	0.66	0.49	0.90	0.84	0.68	0.51	0.92	0.86	0.70	0.52	0.95	0.89	**0.72**	0.54	0.98	0.92	0.75	0.56	0.99	0.93	0.76	0.57
		ΔT	25	24	21	17	26	25	22	17	26	25	22	17	26	25	**22**	17	26	25	21	17	24	23	20	16
		kW	4.02	4.11	4.23	4.37	4.33	4.42	4.56	4.70	4.59	4.69	4.84	5.00	4.83	4.93	**5.09**	5.26	5.03	5.14	5.31	5.48	5.20	5.32	5.49	5.67
		Amps	15.1	15.5	16.0	16.6	16.4	16.8	17.3	18.0	17.8	18.2	18.8	19.6	19.0	19.5	**20.2**	20.9	20.3	20.8	21.5	22.3	21.5	22.0	22.8	23.7
		HI PR	241	259	274	285	270	291	307	320	307	331	349	364	350	377	**398**	415	394	424	447	467	435	468	494	515
		LO PR	107	114	124	132	113	120	131	140	117	125	136	145	123	131	**143**	152	129	137	150	160	133	142	155	165
	2000	MBh	57.8	59.1	63.1	67.5	56.5	57.7	61.6	65.9	55.1	56.3	60.2	64.3	53.8	55.0	58.7	62.8	51.1	52.2	55.8	59.6	47.3	48.4	51.7	55.2
		S/T	0.91	0.85	0.69	0.52	0.94	0.88	0.72	0.54	0.96	0.90	0.74	0.55	1.00	0.93	0.76	0.57	1.00	0.97	0.79	0.59	1.00	1.00	0.79	0.59
		ΔT	24	23	20	16	24	23	20	16	24	23	20	16	25	24	20	16	23	23	20	16	22	22	19	15
		kW	4.05	4.14	4.27	4.40	4.36	4.45	4.59	4.74	4.63	4.73	4.88	5.04	4.87	4.97	5.13	5.30	5.07	5.18	5.35	5.53	5.24	5.36	5.54	5.72
		Amps	15.2	15.6	16.1	16.7	16.5	16.9	17.5	18.1	18.0	18.4	19.0	19.8	19.2	19.7	20.4	21.1	20.5	21.0	21.7	22.5	21.7	22.3	23.0	23.9
		HI PR	243	262	276	288	273	294	310	323	310	334	353	368	353	380	402	419	398	428	452	471	439	473	499	521
		LO PR	108	115	125	133	114	121	132	141	118	126	137	146	124	132	144	154	130	139	151	161	135	143	157	167
85	1500	MBh	52.7	53.7	56.3	60.0	51.5	52.5	55.0	58.6	50.3	51.2	53.7	57.2	49.0	50.0	52.3	55.8	46.6	47.5	49.7	53.1	43.1	44.0	46.1	49.1
		S/T	0.87	0.84	0.76	0.62	0.91	0.87	0.79	0.64	0.93	0.90	0.81	0.66	0.96	0.93	0.83	0.68	1.00	0.96	0.87	0.70	1.00	0.97	0.87	0.71
		ΔT	28	28	26	23	29	28	27	23	29	28	27	23	29	28	27	23	28	28	26	23	26	26	25	21
		kW	3.96	4.04	4.17	4.30	4.26	4.35	4.48	4.62	4.52	4.61	4.76	4.92	4.75	4.85	5.01	5.17	4.94	5.05	5.22	5.39	5.11	5.23	5.40	5.58
		Amps	14.8	15.2	15.7	16.3	16.0	16.4	17.0	17.6	17.5	17.9	18.5	19.2	18.7	19.1	19.8	20.5	19.9	20.4	21.1	21.9	21.1	21.6	22.4	23.2
		HI PR	236	254	268	280	265	285	301	314	301	324	342	357	343	369	390	406	386	415	438	457	426	459	484	505
		LO PR	105	111	121	129	110	118	128	137	115	122	133	142	121	128	140	149	126	134	147	156	131	139	152	162
	1750	MBh	57.1	58.2	61.0	65.0	55.8	56.9	59.6	63.5	54.5	55.5	58.1	62.0	53.1	54.2	56.7	60.5	50.5	51.4	53.9	57.5	46.7	47.7	49.9	53.2
		S/T	0.91	0.87	0.79	0.64	0.94	0.91	0.82	0.66	0.96	0.93	0.84	0.68	0.99	0.96	0.87	0.70	1.00	1.00	0.90	0.73	1.00	1.00	0.91	0.74
		ΔT	27	27	25	22	28	27	26	22	28	27	26	22	28	27	26	22	27	27	25	22	25	25	24	21
		kW	4.05	4.14	4.27	4.40	4.36	4.45	4.59	4.74	4.63	4.73	4.88	5.04	4.87	4.97	5.13	5.30	5.07	5.18	5.35	5.53	5.24	5.36	5.54	5.72
		Amps	15.2	15.6	16.1	16.7	16.5	16.9	17.5	18.1	18.0	18.4	19.0	19.8	19.2	19.7	20.4	21.1	20.5	21.0	21.7	22.5	21.7	22.3	23.0	23.9
		HI PR	243	262	276	288	273	294	310	323	310	334	353	368	353	380	402	419	398	428	452	471	439	473	499	521
		LO PR	108	115	125	133	114	121	132	141	118	126	137	146	124	132	144	154	130	139	151	161	135	143	157	167
	2000	MBh	58.8	60.0	62.8	67.0	57.5	58.6	61.3	65.4	56.1	57.2	59.9	63.9	54.7	55.8	58.4	62.3	52.0	53.0	55.5	59.2	48.2	49.1	51.4	54.8
		S/T	0.95	0.92	0.83	0.67	0.99	0.95	0.86	0.70	1.00	0.97	0.88	0.71	1.00	1.00	0.91	0.74	1.00	1.00	0.94	0.76	1.00	1.00	0.95	0.77
		ΔT	26	25	24	21	26	26	24	21	26	26	24	21	25	26	24	21	24	24	24	21	22	23	22	19
		kW	4.09	4.17	4.30	4.44	4.39	4.49	4.63	4.78	4.67	4.77	4.92	5.08	4.91	5.01	5.18	5.35	5.11	5.22	5.39	5.57	5.29	5.40	5.58	5.77
		Amps	15.4	15.8	16.3	16.9	16.7	17.1	17.6	18.3	18.1	18.6	19.2	19.9	19.4	19.9	20.6	21.3	20.7	21.2	21.9	22.7	21.9	22.5	23.2	24.1
		HI PR	246	264	279	291	276	297	313	327	313	337	356	371	357	384	406	423	402	432	456	476	444	477	504	526
		LO PR	109	116	126	135	115	122	134	142	120	127	139	148	126	134	146	155	132	140	153	163	136	145	158	168

IDB: Entering Indoor Dry Bulb Temperature

High and low pressures are measured at the liquid and suction service valves.

Shaded area reflects AHRI conditions

Amps = outdoor unit amps (comp.+fan)

kW = Total system power

			Outdoor Ambient Temperature																							
			65				75				85				95				105				115			
			Entering Indoor Wet Bulb Temperature																							
IDB	Airflow		59	63	67	71	59	63	67	71	59	63	67	71	59	63	67	71	59	63	67	71	59	63	67	71
70	1500	MBh	53.8	55.7	61.0	-	52.5	54.4	59.6	-	51.3	53.1	58.2	-	50.0	51.8	56.8	-	47.5	49.2	53.9	-	44.0	45.6	50.0	-
		S/T	0.66	0.55	0.38	-	0.68	0.57	0.39	-	0.70	0.58	0.40	-	0.72	0.60	0.42	-	0.75	0.62	0.43	-	0.75	0.63	0.44	-
		ΔT	22	19	14	-	22	19	14	-	22	19	14	-	22	19	14	-	22	19	14	-	20	18	13	-
		kW	3.97	4.05	4.18	-	4.27	4.37	4.51	-	4.54	4.64	4.80	-	4.78	4.89	5.05	-	4.99	5.10	5.27	-	5.16	5.28	5.45	-
		Amps	15.4	15.8	16.3	-	16.7	17.1	17.6	-	18.1	18.6	19.2	-	19.4	19.9	20.6	-	20.7	21.2	21.9	-	22.0	22.5	23.3	-
		HI PR	228	245	259	-	256	275	291	-	291	313	331	-	331	357	377	-	373	401	424	-	412	443	468	-
		LO PR	98	104	114	-	103	110	120	-	107	114	125	-	113	120	131	-	118	126	137	-	122	130	142	-
	1750	MBh	55.4	57.4	62.9	-	54.1	56.1	61.4	-	52.8	54.7	59.9	-	51.5	53.4	58.5	-	48.9	50.7	55.6	-	45.3	47.0	51.5	-
		S/T	0.69	0.57	0.40	-	0.71	0.60	0.41	-	0.73	0.61	0.42	-	0.75	0.63	0.44	-	0.78	0.65	0.45	-	0.79	0.66	0.46	-
		ΔT	20	17	13	-	20	18	13	-	20	18	13	-	20	18	13	-	20	17	13	-	19	16	12	-
		kW	4.00	4.09	4.21	-	4.31	4.40	4.54	-	4.58	4.68	4.84	-	4.82	4.93	5.09	-	5.03	5.14	5.31	-	5.20	5.32	5.50	-
		Amps	15.5	15.9	16.4	-	16.8	17.2	17.8	-	18.3	18.8	19.4	-	19.6	20.1	20.8	-	20.9	21.4	22.2	-	22.2	22.7	23.5	-
		HI PR	230	248	262	-	258	278	294	-	294	316	334	-	335	360	380	-	377	405	428	-	416	448	473	-
		LO PR	99	105	115	-	104	111	121	-	108	115	126	-	114	121	132	-	119	127	139	-	124	131	143	-
	2000	MBh	55.6	57.7	63.2	-	54.3	56.3	61.7	-	53.0	55.0	60.2	-	51.8	53.6	58.8	-	49.2	51.0	55.8	-	45.5	47.2	51.7	-
		S/T	0.70	0.58	0.40	-	0.72	0.60	0.42	-	0.74	0.62	0.43	-	0.77	0.64	0.44	-	0.79	0.66	0.46	-	0.80	0.67	0.46	-
		ΔT	18	15	12	-	18	16	12	-	18	16	12	-	18	16	12	-	18	16	12	-	17	15	11	-
		kW	4.03	4.12	4.25	-	4.34	4.44	4.58	-	4.62	4.72	4.88	-	4.86	4.97	5.13	-	5.07	5.18	5.36	-	5.25	5.37	5.55	-
		Amps	15.7	16.0	16.6	-	17.0	17.4	18.0	-	18.5	18.9	19.6	-	19.8	20.3	21.0	-	21.1	21.6	22.4	-	22.4	22.9	23.7	-
		HI PR	233	250	264	-	261	281	297	-	297	319	337	-	338	364	384	-	380	409	432	-	420	452	477	-
		LO PR	100	106	116	-	105	112	122	-	110	117	127	-	115	122	134	-	121	128	140	-	125	133	145	-
75	1500	MBh	54.7	56.3	60.9	65.4	53.4	55.0	59.5	63.9	52.1	53.7	58.1	62.3	50.9	**52.4**	56.7	60.8	48.3	49.7	53.8	57.8	44.7	46.1	49.9	53.5
		S/T	0.75	0.67	0.50	0.32	0.77	0.69	0.52	0.34	0.79	0.71	0.54	0.35	0.82	**0.73**	0.55	0.36	0.85	0.76	0.57	0.37	0.86	0.77	0.58	0.37
		ΔT	25	23	19	13	25	23	19	13	25	23	19	13	26	**23**	19	13	25	23	19	13	23	22	18	12
		kW	4.00	4.09	4.22	4.35	4.31	4.40	4.55	4.69	4.58	4.68	4.84	5.00	4.82	**4.93**	5.09	5.26	5.03	5.14	5.31	5.49	5.20	5.32	5.50	5.69
		Amps	15.5	15.9	16.4	17.1	16.8	17.2	17.8	18.5	18.3	18.8	19.4	20.2	19.6	**20.1**	20.8	21.6	20.9	21.4	22.2	23.0	22.2	22.7	23.5	24.4
		HI PR	230	248	262	273	258	278	294	306	294	316	334	348	335	**360**	380	397	377	405	428	446	416	448	473	493
		LO PR	99	105	115	122	104	111	121	129	108	115	126	134	114	**121**	132	141	119	127	139	148	124	131	143	153
	1750	MBh	56.3	58.0	62.7	67.3	55.0	56.6	61.3	65.8	53.7	55.3	59.8	64.2	52.4	**53.9**	58.4	62.6	49.8	51.2	55.5	59.5	46.1	47.5	51.4	55.1
		S/T	0.78	0.70	0.53	0.34	0.81	0.72	0.55	0.35	0.83	0.74	0.56	0.36	0.86	**0.77**	0.58	0.37	0.89	0.80	0.60	0.39	0.90	0.80	0.61	0.39
		ΔT	23	21	17	12	23	22	18	12	23	22	18	12	24	**22**	18	12	23	21	18	12	22	20	16	11
		kW	4.03	4.12	4.25	4.39	4.34	4.44	4.58	4.73	4.62	4.72	4.88	5.04	4.86	**4.97**	5.14	5.31	5.07	5.18	5.36	5.54	5.25	5.37	5.55	5.74
		Amps	15.7	16.1	16.6	17.2	17.0	17.4	18.0	18.7	18.5	18.9	19.6	20.3	19.8	**20.3**	21.0	21.8	21.1	21.6	22.4	23.2	22.4	22.9	23.7	24.7
		HI PR	233	250	264	276	261	281	297	309	297	320	337	352	338	**364**	384	401	380	409	432	451	420	452	478	498
		LO PR	100	106	116	123	105	112	122	130	110	117	127	136	115	**122**	134	142	121	128	140	149	125	133	145	154
	2000	MBh	56.6	58.3	63.1	67.7	55.3	56.9	61.6	66.1	53.9	55.5	60.1	64.5	52.6	**54.2**	58.7	63.0	50.0	51.5	55.7	59.8	46.3	47.7	51.6	55.4
		S/T	0.79	0.71	0.54	0.35	0.82	0.73	0.56	0.36	0.84	0.75	0.57	0.37	0.87	**0.78**	0.59	0.38	0.90	0.81	0.61	0.39	0.91	0.81	0.62	0.40
		ΔT	21	19	16	11	21	19	16	11	21	19	16	11	21	**19**	16	11	21	19	16	11	19	18	15	10
		kW	4.06	4.15	4.28	4.42	4.38	4.48	4.62	4.77	4.66	4.76	4.92	5.08	4.90	**5.01**	5.18	5.35	5.11	5.23	5.40	5.59	5.29	5.41	5.59	5.78
		Amps	15.8	16.2	16.7	17.4	17.1	17.6	18.1	18.8	18.7	19.1	19.8	20.5	20.0	**20.5**	21.2	22.0	21.3	21.8	22.6	23.5	22.6	23.2	24.0	24.9
		HI PR	235	253	267	278	264	284	300	312	300	323	341	355	341	**367**	388	405	384	413	437	455	424	457	482	503
		LO PR	101	107	117	125	106	113	124	132	111	118	129	137	116	**124**	135	144	122	130	141	151	126	134	146	156

IDB: Entering Indoor Dry Bulb Temperature

Shaded area reflects ACCA (TVA) conditions

Amps = outdoor unit amps (comp.+fan)

High and low pressures are measured at the liquid and suction service valves.

kW = Total system power

Expanded Cooling Data — ASX130611** (cont.)

			Outdoor Ambient Temperature																							
			65				75				85				95				105				115			
			Entering Indoor Wet Bulb Temperature																							
IDB	Airflow		59	63	67	71	59	63	67	71	59	63	67	71	59	63	67	71	59	63	67	71	59	63	67	71
80	1500	MBh	55.6	56.9	60.7	64.9	54.3	55.5	59.3	63.4	53.0	54.2	57.9	61.9	51.8	52.9	**56.5**	60.4	49.2	50.2	53.7	57.4	45.5	46.5	49.7	53.2
		S/T	0.82	0.77	0.62	0.47	0.85	0.80	0.65	0.48	0.87	0.82	0.66	0.50	0.90	0.84	**0.69**	0.51	0.93	0.87	0.71	0.53	0.94	0.88	0.72	0.54
		ΔT	28	27	23	19	28	27	24	19	28	27	24	19	28	27	**24**	19	28	27	23	19	26	25	22	17
		kW	4.03	4.12	4.25	4.39	4.35	4.44	4.58	4.73	4.62	4.72	4.88	5.04	4.86	4.97	**5.14**	5.31	5.07	5.18	5.36	5.54	5.25	5.37	5.55	5.74
		Amps	15.7	16.1	16.6	17.2	17.0	17.4	18.0	18.7	18.5	18.9	19.6	20.3	19.8	20.3	**21.0**	21.8	21.1	21.6	22.4	23.2	22.4	22.9	23.7	24.7
		HI PR	233	250	264	276	261	281	297	309	297	320	337	352	338	364	**384**	401	380	409	432	451	420	452	478	498
		LO PR	100	106	116	123	105	112	122	130	110	117	127	136	115	122	**134**	142	121	128	140	149	125	133	145	154
	1750	MBh	57.3	58.6	62.6	66.9	56.0	57.2	61.1	65.3	54.6	55.8	59.6	63.8	53.3	54.5	58.2	62.2	50.6	51.7	55.3	59.1	46.9	47.9	51.2	54.7
		S/T	0.86	0.80	0.65	0.49	0.89	0.83	0.68	0.51	0.91	0.85	0.70	0.52	0.94	0.88	0.72	0.54	1.00	0.92	0.75	0.56	1.00	0.92	0.75	0.56
		ΔT	26	25	22	17	26	25	22	17	26	25	22	17	26	25	22	18	27	25	22	17	25	23	20	16
		kW	4.07	4.15	4.28	4.42	4.38	4.48	4.62	4.77	4.66	4.76	4.92	5.08	4.90	5.01	5.18	5.35	5.11	5.23	5.40	5.59	5.29	5.41	5.59	5.79
		Amps	15.8	16.2	16.7	17.4	17.1	17.6	18.2	18.9	18.7	19.1	19.8	20.5	20.0	20.5	21.2	22.0	21.3	21.8	22.6	23.5	22.6	23.2	24.0	24.9
		HI PR	235	253	267	279	264	284	300	313	300	323	341	355	342	368	388	405	384	414	437	455	425	457	482	503
		LO PR	101	107	117	125	107	113	124	132	111	118	129	137	116	124	135	144	122	130	142	151	126	134	146	156
	2000	MBh	57.6	58.8	62.9	67.2	56.2	57.5	61.4	65.6	54.9	56.1	59.9	64.1	53.6	54.7	58.5	62.5	50.9	52.0	55.6	59.4	47.1	48.2	51.5	55.0
		S/T	0.87	0.82	0.66	0.50	0.90	0.85	0.69	0.51	0.92	0.87	0.71	0.53	0.95	0.89	0.73	0.54	1.00	0.93	0.76	0.56	1.00	0.94	0.76	0.57
		ΔT	23	22	19	15	23	22	19	16	23	22	19	16	23	23	20	16	23	22	19	15	22	21	18	14
		kW	4.10	4.19	4.32	4.46	4.42	4.51	4.66	4.81	4.70	4.80	4.96	5.12	4.94	5.06	5.22	5.40	5.16	5.27	5.45	5.63	5.34	5.46	5.64	5.84
		Amps	16.0	16.4	16.9	17.6	17.3	17.7	18.3	19.0	18.8	19.3	20.0	20.7	20.2	20.7	21.4	22.2	21.5	22.0	22.8	23.7	22.8	23.4	24.2	25.1
		HI PR	237	255	270	281	266	287	303	316	303	326	344	359	345	371	392	409	388	418	441	460	429	461	487	508
		LO PR	102	108	118	126	108	114	125	133	112	119	130	138	117	125	136	145	123	131	143	152	127	135	148	157
85	1500	MBh	56.6	57.7	60.4	64.5	55.3	56.4	59.0	63.0	54.0	55.0	57.6	61.5	52.7	53.7	56.2	60.0	50.0	51.0	53.4	57.0	46.3	47.2	49.5	52.8
		S/T	0.86	0.83	0.75	0.61	0.89	0.86	0.77	0.63	0.91	0.88	0.79	0.64	0.94	0.91	0.82	0.66	0.98	0.94	0.85	0.69	0.98	0.95	0.86	0.70
		ΔT	30	29	28	24	30	30	28	24	30	30	28	24	30	30	28	24	30	29	28	24	28	28	26	23
		kW	4.07	4.15	4.28	4.42	4.38	4.48	4.62	4.77	4.66	4.76	4.92	5.08	4.90	5.01	5.18	5.35	5.11	5.23	5.40	5.59	5.29	5.41	5.59	5.79
		Amps	15.8	16.2	16.7	17.4	17.1	17.6	18.2	18.9	18.7	19.1	19.8	20.5	20.0	20.5	21.2	22.0	21.3	21.8	22.6	23.5	22.6	23.2	24.0	24.9
		HI PR	235	253	267	279	264	284	300	313	300	323	341	355	342	368	388	405	384	414	437	455	425	457	482	503
		LO PR	101	107	117	125	107	113	124	132	111	118	129	137	116	124	135	144	122	130	142	151	126	134	146	156
	1750	MBh	58.3	59.4	62.2	66.4	56.9	58.1	60.8	64.9	55.6	56.7	59.4	63.3	54.2	55.3	57.9	61.8	51.5	52.5	55.0	58.7	47.7	48.7	51.0	54.4
		S/T	0.90	0.87	0.78	0.64	0.93	0.90	0.81	0.66	0.96	0.92	0.83	0.68	0.99	0.95	0.86	0.70	1.00	0.99	0.89	0.72	1.00	1.00	0.90	0.73
		ΔT	28	27	26	22	28	27	26	22	28	27	26	22	28	28	26	23	27	27	26	22	25	25	24	21
		kW	4.10	4.19	4.32	4.46	4.42	4.51	4.66	4.81	4.70	4.80	4.96	5.12	4.95	5.06	5.22	5.40	5.16	5.27	5.45	5.63	5.34	5.46	5.64	5.84
		Amps	16.0	16.4	16.9	17.6	17.3	17.7	18.3	19.0	18.8	19.3	20.0	20.7	20.2	20.7	21.4	22.2	21.5	22.0	22.8	23.7	22.8	23.4	24.2	25.1
		HI PR	237	255	270	281	266	287	303	316	303	326	344	359	345	371	392	409	388	418	441	460	429	461	487	508
		LO PR	102	108	118	126	108	114	125	133	112	119	130	138	117	125	136	145	123	131	143	152	127	135	148	157
	2000	MBh	58.6	59.7	62.5	66.7	57.2	58.3	61.1	65.2	55.9	56.9	59.6	63.6	54.5	55.6	58.2	62.1	51.8	52.8	55.3	59.0	48.0	48.9	51.2	54.6
		S/T	0.91	0.88	0.79	0.64	0.94	0.91	0.82	0.67	0.97	0.93	0.84	0.68	1.00	0.96	0.87	0.71	1.00	1.00	0.90	0.73	1.00	1.00	0.91	0.74
		ΔT	25	24	23	20	25	24	23	20	25	24	23	20	25	25	23	20	24	24	23	20	22	22	21	19
		kW	4.13	4.22	4.35	4.50	4.45	4.55	4.70	4.85	4.74	4.84	5.00	5.17	4.99	5.10	5.27	5.45	5.20	5.32	5.49	5.68	5.38	5.50	5.69	5.89
		Amps	16.1	16.5	17.1	17.7	17.5	17.9	18.5	19.2	19.0	19.5	20.1	20.9	20.4	20.9	21.6	22.4	21.7	22.2	23.0	23.9	23.0	23.6	24.4	25.4
		HI PR	240	258	272	284	269	289	306	319	306	329	348	363	348	375	396	413	392	422	445	465	433	466	492	513
		LO PR	103	109	119	127	109	116	126	134	113	120	131	140	119	126	138	147	124	132	144	154	129	137	149	159

IDB: Entering Indoor Dry Bulb Temperature

High and low pressures are measured at the liquid and suction service valves.

Shaded area reflects AHRI conditions

Amps = outdoor unit amps (comp.+fan)

kW = Total system power

Outdoor Unit	Indoor Units		Cooling Ratings				CFM	AHRI #
	Coils/Air Handlers	Furnaces	Total[1]	Sens.[1]	SEER[2]	EER[3]		
ASX13 0181D*	ACNF18XX16D*		16,800	12,200	13.0	10.8	600	5996190
	ACNF24XX16D*		17,000	12,400	13.0	10.8	600	5996191
	ARUF18B14A*		17,200	12,500	13.0	11.0	600	5360217
	ARUF18B14A*+TXV		17,200	12,500	13.0	11.0	600	5501052
	ARUF24B14C*+TXV		17,200	12,500	13.5	11.0	600	7084858
	ARUF25B14A*		18,000	13,100	13.0	11.0	570	7988980
	ASPT25B14A*		17,600	12,800	14.0	12.0	580	8245597
	ASPT29B14A*		18,000	13,100	14.0	12.0	560	8245599
	ASPT30C14A*		18,000	13,100	14.0	12.0	580	5722570
	ASPT33C14B*+HSK		18,000	13,700	14.0	12.0	615	201834841
	AVPTC24B14A*		17,600	12,800	14.0	12.0	600	5924371
	AVPTC25B14A*		17,800	13,000	14.0	12.0	640	8996338
	AVPTC29B14A*		18,000	13,100	14.0	12.0	585	8996339
	AVPTC30C14A*		18,000	13,100	14.0	12.0	615	5924461
	AVPTC33C14A*		18,600	14,200	14.0	12.0	645	10221061
	AVPTC33C14A*+HSK		18,600	14,200	14.0	12.0	645	10221062
	AWUF18XX16B*		17,400	12,700	13.0	11.0	650	4704296
	AWUF24XX16B*		17,400	12,700	13.0	11.0	650	8561322
	AWUF31XX16A*		17,400	12,700	14.0	11.5	600	4704297
	CA*F1824*6D*	A*EC960303ANA*	17,800	13,000	13.5	11.5	650	10516202
	CA*F1824*6D*	A*EC960403ANA*	17,800	13,000	13.5	11.5	610	10516207
	CA*F1824*6D*	A*EC960603ANA*	17,400	12,700	14.0	11.5	580	10516212
	CA*F1824*6D*	A*EC960403BNA*	17,800	13,600	13.5	11.5	625	10338563
	CA*F1824*6D*	G*VM970603BNA*	17,800	13,000	14.0	11.5	600	7358303
	CA*F1824*6D*	A*EC960302BNA*	17,800	13,000	14.0	11.5	600	7366706
	CA*F1824*6D*	A*VM970603BNA*	17,800	13,000	14.0	11.5	600	7358298
	CA*F1824*6D*	G*E80603B*B*	17,800	13,000	14.0	11.5	640	6498376
	CA*F1824*6D*	G*EC960302BNA*	17,800	13,000	14.0	11.5	600	7366603
	CA*F1824*6D*	G*EC960603BNA*	17,400	12,700	14.0	11.5	550	7366613
	CA*F1824*6D*	G*VC80604B*B*	17,700	12,900	14.0	11.6	620	5188199
	CA*F1824*6D*	G*EC960402BNA*	17,800	13,000	14.0	11.5	600	7366608
	CA*F1824*6D*	A*VC960803BNA*	17,800	13,000	14.0	11.5	630	7358297
	CA*F1824*6D*	A*EC960402BNA*	17,800	13,000	14.0	11.5	600	7366711
	CA*F1824*6D*	A*EC960803BNA*	17,800	13,000	14.0	11.5	575	7366721
	CA*F1824*6D*	A*VC960603BNA*	17,800	13,000	14.0	11.5	600	7358296
	CA*F1824*6D*	G*EC960803BNA*	17,800	13,000	14.0	11.5	575	7366618
	CA*F1824*6D*	G*VC960803BNA*	17,800	13,000	14.0	11.5	630	7358302
	CA*F1824*6D*	A*EC960603BNA*	17,400	12,700	14.0	11.5	550	7366716
	CA*F1824*6D*	A*VM970803BNA*	17,800	13,000	14.0	11.5	630	7358299
	CA*F1824*6D*	G*VC960403BNA*	17,800	13,000	14.0	11.5	625	7358300
	CA*F1824*6D*	A*VC960403BNA*	17,800	13,000	14.0	11.5	625	7358295
	CA*F1824*6D*	A*VC80604B*B*	17,700	12,900	14.0	11.6	620	5188198
	CA*F1824*6D*	A*EH800603B*A*	17,800	13,000	14.0	11.5	640	6945801
	CA*F1824*6D*	G*VM970803BNA*	17,800	13,000	14.0	11.5	630	7358304
	CA*F1824*6D*	G*VC960603BNA*	17,800	13,000	14.0	11.5	600	7358301
	CA*F1824*6D*+EEP		17,800	13,000	13.0	11.0	600	4704300
	CA*F1824*6D*+MBVC1200**-1A*		18,200	13,300	14.0	11.5	640	6498380
	CA*F1824*6D*+TXV	A*EC960303ANA*	17,800	13,000	14.0	12.0	650	10516203
	CA*F1824*6D*+TXV	A*EC960403ANA*	17,800	13,000	14.0	11.5	610	10516208
	CA*F1824*6D*+TXV	A*EC960603ANA*	17,400	12,700	14.0	12.0	580	10516213
	CA*F1824*6D*+TXV	A*EC960403BNA*	17,800	13,600	14.0	12.0	625	10338564
	CA*F1824*6D*+TXV	A*EC960803BNA*	17,800	13,000	14.0	11.5	575	7366722
	CA*F1824*6D*+TXV	G*EC960302BNA*	17,800	13,000	14.0	11.5	600	7366604

See Notes on Page 48.

Outdoor Unit	Indoor Units		Cooling Ratings				CFM	AHRI #
	Coils/Air Handlers	Furnaces	Total[1]	Sens.[1]	SEER[2]	EER[3]		
ASX13 0181D* (Contd.)	CA*F1824*6D*+TXV	G*VM970803BNA*	17,800	13,000	14.0	11.5	630	7358314
	CA*F1824*6D*+TXV	A*VM970603BNA*	17,800	13,000	14.0	11.5	600	7358308
	CA*F1824*6D*+TXV	G*VC960603BNA*	17,800	13,000	14.0	11.5	600	7358311
	CA*F1824*6D*+TXV	G*EC960402BNA*	17,800	13,000	14.0	11.5	600	7366609
	CA*F1824*6D*+TXV	A*VC960803BNA*	17,800	13,000	14.0	11.5	630	7358307
	CA*F1824*6D*+TXV	A*EC960603BNA*	17,400	12,700	14.0	11.5	550	7366717
	CA*F1824*6D*+TXV	A*EC960302BNA*	17,800	13,000	14.0	11.5	600	7366707
	CA*F1824*6D*+TXV	G*VC960403BNA*	17,800	13,000	14.0	11.5	625	7358310
	CA*F1824*6D*+TXV	A*VM970803BNA*	17,800	13,000	14.0	11.5	630	7358309
	CA*F1824*6D*+TXV	A*VC960603BNA*	17,800	13,000	14.0	11.5	600	7358306
	CA*F1824*6D*+TXV	G*VC960803BNA*	17,800	13,000	14.0	11.5	630	7358312
	CA*F1824*6D*+TXV	A*VC960403BNA*	17,800	13,000	14.0	11.5	625	7358305
	CA*F1824*6D*+TXV	A*EC960402BNA*	17,800	13,000	14.0	11.5	600	7366712
	CA*F1824*6D*+TXV	G*VM970603BNA*	17,800	13,000	14.0	11.5	600	7358313
	CA*F1824*6D*+TXV	G*EC960603BNA*	17,400	12,700	14.0	11.5	550	7366614
	CA*F1824*6D*+TXV	G*EC960803BNA*	17,800	13,000	14.0	11.5	575	7366619
	CA*F3030*6D*+EEP		18,000	13,100	13.0	11.0	650	5582213
	CA*F3030*6D*+EEP+TXV		18,000	13,100	13.0	11.0	650	5582579
	CA*F3131*6D*+EEP		18,000	13,100	13.0	11.0	650	5582214
	CA*F3131*6D*+EEP+TXV		18,000	13,100	13.0	11.0	650	5582215
	CA*F3636*6D*	G*VC960803BNA*	18,400	13,400	14.0	11.5	630	7358322
	CA*F3636*6D*	G*VM970603BNA*	18,400	13,400	14.0	11.5	600	7358323
	CA*F3636*6D*	A*VM970603BNA*	18,400	13,400	14.0	11.5	600	7358318
	CA*F3636*6D*	A*VC960603BNA*	18,400	13,400	14.0	11.5	600	7358316
	CA*F3636*6D*	G*VC960403BNA*	18,400	13,400	14.0	11.5	625	7358320
	CA*F3636*6D*	G*VC960603BNA*	18,400	13,400	14.0	11.5	600	7358321
	CA*F3636*6D*	A*VM970803BNA*	18,400	13,400	14.0	11.5	630	7358319
	CA*F3636*6D*	G*VM970803BNA*	18,400	13,400	14.0	11.5	630	7358324
	CA*F3636*6D*	A*VC960803BNA*	18,400	13,400	14.0	11.5	630	7358317
	CA*F3636*6D*	A*VC960403BNA*	18,400	13,400	14.0	11.5	625	7358315
	CA*F3636*6D*+TXV	A*VM970603BNA*	18,400	13,400	14.0	11.5	600	7358328
	CA*F3636*6D*+TXV	G*VC960803BNA*	18,400	13,400	14.0	11.5	630	7358332
	CA*F3636*6D*+TXV	G*VC960403BNA*	18,400	13,400	14.0	11.5	625	7358330
	CA*F3636*6D*+TXV	A*VC960803BNA*	18,400	13,400	14.0	11.5	630	7358327
	CA*F3636*6D*+TXV	A*VM970803BNA*	18,400	13,400	14.0	11.5	630	7358329
	CA*F3636*6D*+TXV	G*VM970603BNA*	18,400	13,400	14.0	11.5	600	7358333
	CA*F3636*6D*+TXV	G*VC960603BNA*	18,400	13,400	14.0	11.5	600	7358331
	CA*F3636*6D*+TXV	G*VM970803BNA*	18,400	13,400	14.0	11.5	630	7358334
	CA*F3636*6D*+TXV	A*VC960603BNA*	18,400	13,400	14.0	11.5	600	7358326
	CA*F3636*6D*+TXV	A*VC960403BNA*	18,400	13,400	14.0	11.5	625	7358325
	CAPT3131*4A*	A*EC960303ANA*	17,800	13,000	13.5	11.5	650	10516204
	CAPT3131*4A*	A*EC960403ANA*	17,800	13,000	13.5	11.5	610	10516209
	CAPT3131*4A*	A*EC960603ANA*	17,400	12,700	14.0	12.0	580	10516214
	CAPT3131*4A*	A*EC960403BNA*	18,000	13,700	14.0	12.0	625	10338565
	CAPT3131*4A*	G*E80603B*B*	18,000	13,100	14.0	11.5	600	5948548
	CAPT3131*4A*	A*VC80604B*B*	18,000	13,100	14.0	11.5	620	5948541
	CAPT3131*4A*	A*VC960603BNA*	18,000	13,100	14.0	11.5	600	7358336
	CAPT3131*4A*	G*VM970803BNA*	18,000	13,100	14.0	11.5	630	7358344
	CAPT3131*4A*	G*EC960803BNA*	17,800	13,000	14.0	11.5	575	7366620
	CAPT3131*4A*	G*EC960402BNA*	17,800	13,000	14.0	11.5	600	7366610
	CAPT3131*4A*	A*VM970603BNA*	18,000	13,100	14.0	11.5	600	7358338
	CAPT3131*4A*	G*VC960803BNA*	18,000	13,100	14.0	11.5	630	7358342
	CAPT3131*4A*	G*VM970603BNA*	18,000	13,100	14.0	11.5	600	7358343

See Notes on Page 48.

Outdoor Unit	Indoor Units		Cooling Ratings				CFM	AHRI #
	Coils/Air Handlers	Furnaces	Total[1]	Sens.[1]	SEER[2]	EER[3]		
ASX13 0181D* (Contd.)	CAPT3131*4A*	G*VC80604B*B*	18,000	13,100	14.0	11.5	620	5948549
	CAPT3131*4A*	ADVC80603B*B*	18,000	13,100	14.0	11.5	675	5948547
	CAPT3131*4A*	A*EC960302BNA*	17,800	13,000	14.0	11.5	600	7366708
	CAPT3131*4A*	A*VC960803BNA*	18,000	13,100	14.0	11.5	630	7358337
	CAPT3131*4A*	A*VM970803BNA*	18,000	13,100	14.0	11.5	630	7358339
	CAPT3131*4A*	G*VC960403BNA*	18,000	13,100	14.0	11.5	625	7358340
	CAPT3131*4A*	A*VC960403BNA*	18,000	13,100	14.0	11.5	625	7358335
	CAPT3131*4A*	G*EC960302BNA*	17,800	13,000	14.0	11.5	600	7366605
	CAPT3131*4A*	A*EC960603BNA*	17,400	12,700	14.0	11.5	550	7366718
	CAPT3131*4A*	A*EC960402BNA*	17,800	13,000	14.0	11.5	600	7366713
	CAPT3131*4A*	G*EC960603BNA*	17,400	12,700	14.0	11.5	550	7366615
	CAPT3131*4A*	A*EC960803BNA*	17,800	13,000	14.0	11.5	575	7366723
	CAPT3131*4A*	A*EH800603B*A*	18,000	13,100	14.0	11.5	600	6945803
	CAPT3131*4A*	G*VC960603BNA*	18,000	13,100	14.0	11.5	600	7358341
	CAPT3131*4A*+EEP		18,000	13,100	13.0	11.0	600	5611354
	CAPT3131*4A*+MBVC1200**-1A*		18,000	13,100	14.0	11.5	600	5611355
	CHPF1824A6C*+EEP		18,000	13,100	13.0	11.0	600	4704301
	CHPF2430B6C*	A*EC960303ANA*	17,800	13,000	13.5	11.5	650	10516205
	CHPF2430B6C*	A*EC960403ANA*	17,800	13,000	13.5	11.5	610	10516210
	CHPF2430B6C*	A*EC960603ANA*	17,400	12,700	14.0	11.5	580	10516215
	CHPF2430B6C*	A*EC960403BNA*	18,000	13,700	13.5	11.5	625	10338566
	CHPF2430B6C*	A*EC960603BNA*	17,400	12,700	14.0	11.5	550	7366719
	CHPF2430B6C*	G*EC960302BNA*	17,800	13,000	14.0	11.5	600	7366606
	CHPF2430B6C*	G*VC960603BNA*	18,000	13,100	14.0	11.5	600	7358351
	CHPF2430B6C*	G*VC960403BNA*	18,000	13,100	14.0	11.5	625	7358350
	CHPF2430B6C*	A*EC960803BNA*	17,800	13,000	14.0	11.5	575	7366724
	CHPF2430B6C*	A*EC960402BNA*	17,800	13,000	14.0	11.5	600	7366714
	CHPF2430B6C*	G*EC960402BNA*	17,800	13,000	14.0	11.5	600	7366611
	CHPF2430B6C*	G*VM970803BNA*	18,000	13,100	14.0	11.5	630	7358354
	CHPF2430B6C*	A*VC960403BNA*	18,000	13,100	14.0	11.5	625	7358345
	CHPF2430B6C*	A*VC960603BNA*	18,000	13,100	14.0	11.5	600	7358346
	CHPF2430B6C*	G*E80603B*B*	18,000	13,100	14.0	11.5	640	6498383
	CHPF2430B6C*	A*EC960302BNA*	17,800	13,000	14.0	11.5	600	7366709
	CHPF2430B6C*	A*VM970603BNA*	18,000	13,100	14.0	11.5	600	7358348
	CHPF2430B6C*	G*EC960603BNA*	17,400	12,700	14.0	11.5	550	7366616
	CHPF2430B6C*	A*VC960803BNA*	18,000	13,100	14.0	11.5	630	7358347
	CHPF2430B6C*	G*VC960803BNA*	18,000	13,100	14.0	11.5	630	7358352
	CHPF2430B6C*	G*VC80604B*B*	17,700	12,900	14.0	11.5	660	6498384
	CHPF2430B6C*	G*VM970603BNA*	18,000	13,100	14.0	11.5	600	7358353
	CHPF2430B6C*	A*EH800603B*A*	18,000	13,100	14.0	11.5	640	6945806
	CHPF2430B6C*	A*VM970803BNA*	18,000	13,100	14.0	11.5	630	7358349
	CHPF2430B6C*	A*VC80604B*B*	17,700	12,900	14.0	11.5	660	6498382
	CHPF2430B6C*	G*EC960803BNA*	17,800	13,000	14.0	11.5	575	7366621
	CHPF2430B6C*+EEP		18,000	13,100	13.0	11.0	600	4704302
	CHPF2430B6C*+MBVC1200**-1A*		18,200	13,300	14.0	11.5	650	6498387
	CHPF2430B6C*+TXV	A*EC960303ANA*	17,800	13,000	14.0	12.0	650	10516206
	CHPF2430B6C*+TXV	A*EC960403ANA*	17,800	13,000	14.0	11.5	610	10516211
	CHPF2430B6C*+TXV	A*EC960603ANA*	17,400	12,700	14.0	11.5	580	10516216
	CHPF2430B6C*+TXV	A*EC960403BNA*	18,000	13,700	14.0	12.0	625	10338567
	CHPF2430B6C*+TXV	G*VM970803BNA*	18,000	13,100	14.0	11.5	630	7358364
	CHPF2430B6C*+TXV	G*VC960403BNA*	18,000	13,100	14.0	11.5	625	7358360
	CHPF2430B6C*+TXV	A*VC960803BNA*	18,000	13,100	14.0	11.5	630	7358357
	CHPF2430B6C*+TXV	G*EC960803BNA*	17,800	13,000	14.0	11.5	575	7366622

See Notes on Page 48.

Outdoor Unit	Indoor Units		Cooling Ratings				CFM	AHRI #
	Coils/Air Handlers	Furnaces	Total[1]	Sens.[1]	SEER[2]	EER[3]		
ASX13 0181D* (Contd.)	CHPF2430B6C*+TXV	A*VC960603BNA*	18,000	13,100	14.0	11.5	600	7358356
	CHPF2430B6C*+TXV	A*VM970603BNA*	18,000	13,100	14.0	11.5	600	7358358
	CHPF2430B6C*+TXV	A*EC960803BNA*	17,800	13,000	14.0	11.5	575	7366725
	CHPF2430B6C*+TXV	A*EC960402BNA*	17,800	13,000	14.0	11.5	600	7366715
	CHPF2430B6C*+TXV	A*VM970803BNA*	18,000	13,100	14.0	11.5	630	7358359
	CHPF2430B6C*+TXV	A*EC960603BNA*	17,400	12,700	14.0	11.5	550	7366720
	CHPF2430B6C*+TXV	G*VM970603BNA*	18,000	13,100	14.0	11.5	600	7358363
	CHPF2430B6C*+TXV	G*VC960803BNA*	18,000	13,100	14.0	11.5	630	7358362
	CHPF2430B6C*+TXV	A*EC960302BNA*	17,800	13,000	14.0	11.5	600	7366710
	CHPF2430B6C*+TXV	G*VC960603BNA*	18,000	13,100	14.0	11.5	600	7358361
	CHPF2430B6C*+TXV	G*EC960603BNA*	17,400	12,700	14.0	11.5	550	7366617
	CHPF2430B6C*+TXV	A*VC960403BNA*	18,000	13,100	14.0	11.5	625	7358355
	CHPF2430B6C*+TXV	G*EC960402BNA*	17,800	13,000	14.0	11.5	600	7366612
	CHPF2430B6C*+TXV	G*EC960302BNA*	17,800	13,000	14.0	11.5	600	7366607
	CHPF3636B6C*	A*VC960603BNA*	18,200	13,300	14.0	11.5	600	7358366
	CHPF3636B6C*	A*VM970603BNA*	18,200	13,300	14.0	11.5	600	7358368
	CHPF3636B6C*	A*VC960803BNA*	18,200	13,300	14.0	11.5	630	7358367
	CHPF3636B6C*	G*VC960603BNA*	18,200	13,300	14.0	11.5	600	7358371
	CHPF3636B6C*	G*VC960803BNA*	18,200	13,300	14.0	11.5	630	7358372
	CHPF3636B6C*	A*VC960403BNA*	18,200	13,300	14.0	11.5	625	7358365
	CHPF3636B6C*	G*VM970603BNA*	18,200	13,300	14.0	11.5	600	7358373
	CHPF3636B6C*	A*VM970803BNA*	18,200	13,300	14.0	11.5	630	7358369
	CHPF3636B6C*	G*VC960403BNA*	18,200	13,300	14.0	11.5	625	7358370
	CHPF3636B6C*	G*VM970803BNA*	18,200	13,300	14.0	11.5	630	7358374
	CHPF3636B6C*+TXV	G*VM970603BNA*	18,200	13,300	14.0	11.5	600	7358383
	CHPF3636B6C*+TXV	A*VC960403BNA*	18,200	13,300	14.0	11.5	625	7358375
	CHPF3636B6C*+TXV	A*VC960803BNA*	18,200	13,300	14.0	11.5	630	7358377
	CHPF3636B6C*+TXV	A*VM970603BNA*	18,200	13,300	14.0	11.5	600	7358378
	CHPF3636B6C*+TXV	A*VM970803BNA*	18,200	13,300	14.0	11.5	630	7358379
	CHPF3636B6C*+TXV	G*VC960803BNA*	18,200	13,300	14.0	11.5	630	7358382
	CHPF3636B6C*+TXV	G*VC960603BNA*	18,200	13,300	14.0	11.5	600	7358381
	CHPF3636B6C*+TXV	G*VC960403BNA*	18,200	13,300	14.0	11.5	625	7358380
	CHPF3636B6C*+TXV	A*VC960603BNA*	18,200	13,300	14.0	11.5	600	7358376
	CHPF3636B6C*+TXV	G*VM970803BNA*	18,200	13,300	14.0	11.5	630	7358384
	CSCF1824N6D*	G*VC960403BNA*	18,000	13,100	14.0	11.5	625	7358390
	CSCF1824N6D*	A*VC960603BNA*	18,000	13,100	14.0	11.5	600	7358386
	CSCF1824N6D*	A*VC960803BNA*	18,000	13,100	14.0	11.5	630	7358387
	CSCF1824N6D*	A*VM970803BNA*	18,000	13,100	14.0	11.5	630	7358389
	CSCF1824N6D*	G*VC960803BNA*	18,000	13,100	14.0	11.5	630	7358392
	CSCF1824N6D*	G*VM970603BNA*	18,000	13,100	14.0	11.5	600	7358393
	CSCF1824N6D*	G*VC960603BNA*	18,000	13,100	14.0	11.5	600	7358391
	CSCF1824N6D*	A*EH800603B*A*	18,000	13,100	14.0	11.5	640	6945808
	CSCF1824N6D*	G*VC80604B*B*	17,700	12,900	14.0	11.5	660	6498390
	CSCF1824N6D*	G*VM970803BNA*	18,000	13,100	14.0	11.5	630	7358394
	CSCF1824N6D*	A*VM970603BNA*	18,000	13,100	14.0	11.5	600	7358388
	CSCF1824N6D*	G*E80603B*B*	18,000	13,100	14.0	11.5	640	6498389
	CSCF1824N6D*	A*VC960403BNA*	18,000	13,100	14.0	11.5	625	7358385
	CSCF1824N6D*	A*VC80604B*B*	17,700	12,900	14.0	11.5	660	6498388
	CSCF1824N6D*+EEP		18,000	13,100	13.0	11.0	600	4767330
	CSCF1824N6D*+TXV	G*VM970603BNA*	18,000	13,100	14.0	11.5	600	7358403
	CSCF1824N6D*+TXV	G*VC960603BNA*	18,000	13,100	14.0	11.5	600	7358401
	CSCF1824N6D*+TXV	A*VC960403BNA*	18,000	13,100	14.0	11.5	625	7358395
	CSCF1824N6D*+TXV	G*VC960403BNA*	18,000	13,100	14.0	11.5	625	7358400

See Notes on Page 48.

Outdoor Unit	Indoor Units		Cooling Ratings				CFM	AHRI #
	Coils/Air Handlers	Furnaces	Total[1]	Sens.[1]	SEER[2]	EER[3]		
ASX13 0181D* (Contd.)	CSCF1824N6D*+TXV	A*VM970803BNA*	18,000	13,100	14.0	11.5	630	7358399
	CSCF1824N6D*+TXV	G*VM970803BNA*	18,000	13,100	14.0	11.5	630	7358404
	CSCF1824N6D*+TXV	G*VC960803BNA*	18,000	13,100	14.0	11.5	630	7358402
	CSCF1824N6D*+TXV	A*VM970603BNA*	18,000	13,100	14.0	11.5	600	7358398
	CSCF1824N6D*+TXV	A*VC960803BNA*	18,000	13,100	14.0	11.5	630	7358397
	CSCF1824N6D*+TXV	A*VC960603BNA*	18,000	13,100	14.0	11.5	600	7358396
	CSCF3036N6D*	A*VM970603BNA*	18,200	13,300	14.0	11.5	600	7358408
	CSCF3036N6D*	G*VC960803BNA*	18,200	13,300	14.0	11.5	630	7358412
	CSCF3036N6D*	A*VM970803BNA*	18,200	13,300	14.0	11.5	630	7358409
	CSCF3036N6D*	G*VM970603BNA*	18,200	13,300	14.0	11.5	600	7358413
	CSCF3036N6D*	A*VC960603BNA*	18,200	13,300	14.0	11.5	600	7358406
	CSCF3036N6D*	G*VC960603BNA*	18,200	13,300	14.0	11.5	600	7358411
	CSCF3036N6D*	G*VM970803BNA*	18,200	13,300	14.0	11.5	630	7358414
	CSCF3036N6D*	G*VC960403BNA*	18,200	13,300	14.0	11.5	625	7358410
	CSCF3036N6D*	A*VC960403BNA*	18,200	13,300	14.0	11.5	625	7358405
	CSCF3036N6D*	A*VC960803BNA*	18,200	13,300	14.0	11.5	630	7358407
	CSCF3036N6D*+TXV	G*VC960403BNA*	18,200	13,300	14.0	11.5	625	7358420
	CSCF3036N6D*+TXV	G*VM970603BNA*	18,200	13,300	14.0	11.5	600	7358423
	CSCF3036N6D*+TXV	A*VC960403BNA*	18,200	13,300	14.0	11.5	625	7358415
	CSCF3036N6D*+TXV	G*VM970803BNA*	18,200	13,300	14.0	11.5	630	7358424
	CSCF3036N6D*+TXV	A*VM970803BNA*	18,200	13,300	14.0	11.5	630	7358419
	CSCF3036N6D*+TXV	A*VM970603BNA*	18,200	13,300	14.0	11.5	600	7358418
	CSCF3036N6D*+TXV	G*VC960803BNA*	18,200	13,300	14.0	11.5	630	7358422
	CSCF3036N6D*+TXV	A*VC960603BNA*	18,200	13,300	14.0	11.5	600	7358416
	CSCF3036N6D*+TXV	A*VC960803BNA*	18,200	13,300	14.0	11.5	630	7358417
	CSCF3036N6D*+TXV	G*VC960603BNA*	18,200	13,300	14.0	11.5	600	7358421
	CAPFA1818*6A*+EEP		18,200	12,800	11.2	13.0	600	201953240
	CAPFA1818*6A*	A*VC80603B*C*	18,400	12,900	12.2	14.5	610	201953241
	CAPFA1818*6A*+TXV	A*VC80603B*C*	18,400	12,900	12.2	14.5	610	201953242
	CAPFA1818*6A*	A*VC80803B*C*	18,400	12,900	12.2	14.5	610	201953243
	CAPFA1818*6A*+TXV	A*VC80803B*C*	18,400	12,900	12.2	14.5	610	201953244
	CAPFA1818*6A*	A*VC960403BNB*	18,400	12,900	12.2	14.0	620	201953245
	CAPFA1818*6A*+TXV	A*VC960403BNB*	18,400	12,900	12.2	14.5	620	201953246
	CAPFA1818*6A*	A*VC960603BNB*	18,400	12,900	12.2	14.0	620	201953247
	CAPFA1818*6A*+TXV	A*VC960603BNB*	18,400	12,900	12.2	14.5	620	201953248
	CAPFA1818*6A*	A*VC960803BNB*	18,400	12,900	12.2	14.0	620	201953249
	CAPFA1818*6A*+TXV	A*VC960803BNB*	18,400	12,900	12.2	14.5	620	201953250
	CAPFA1818*6A*	A*VM970603BNA*	18,400	12,900	12.2	14.0	620	201953251
	CAPFA1818*6A*+TXV	A*VM970603BNA*	18,400	12,900	12.2	14.5	620	201953252
	CAPFA1818*6A*	A*VM970803BNA*	18,400	12,900	12.2	14.0	630	201953253
	CAPFA1818*6A*+TXV	A*VM970803BNA*	18,400	12,900	12.2	14.5	630	201953254
ASX13 0241C*	ACNF24XX16D*		22,400	16,600	13.0	11.0	770	5996192
	ACNF30XX16D*		22,600	16,700	13.0	11.0	845	5996193
	ARUF24B14C*+TXV		22,000	16,300	13.0	11.0	800	7084866
	ARUF29B14A*		23,400	17,300	13.0	11.0	860	8000272
	ASPT30C14A*		23,400	17,300	14.0	12.0	845	5722577
	ASPT33C14B*+HSK		23,400	17,300	14.0	12.0	820	201834842
	AVPTC24B14A*		22,600	16,700	14.0	12.0	800	5924462
	AVPTC30C14A*		23,400	17,300	14.0	12.0	780	5924463
	AVPTC33C14A*+HSK		23,400	17,300	14.0	12.0	785	10221063
	AWUF24XX16B*		23,000	17,000	13.0	11.0	800	3839009
	AWUF30XX16B*		23,200	17,200	13.0	11.0	800	6498393
	AWUF31XX16A*		23,000	17,000	14.0	11.3	800	3839010

See Notes on Page 48.

Outdoor Unit	Indoor Units		Cooling Ratings				CFM	AHRI #
	Coils/Air Handlers	Furnaces	Total[1]	Sens.[1]	SEER[2]	EER[3]		
ASX13 0241C* (Contd.)	AWUF32XX16A*		23,000	17,000	14.0	11.3	800	3839011
	CA*F1824*6D*	A*EC960303ANA*	23,000	17,000	13.5	11.5	800	10516220
	CA*F1824*6D*	A*EC960403ANA*	23,000	17,000	13.5	11.5	800	10516225
	CA*F1824*6D*	A*EC960603ANA*	23,000	17,000	13.5	11.5	775	10516217
	CA*F1824*6D*	G*VC960603BNA*	23,000	17,000	14.0	11.5	815	7358433
	CA*F1824*6D*	A*EC960302BNA*	23,000	17,000	14.0	11.5	800	7366726
	CA*F1824*6D*	A*VM970804CNA*	23,000	17,000	14.0	11.5	800	7358431
	CA*F1824*6D*	A*VC960804CNA*	23,000	17,000	14.0	11.5	800	7358428
	CA*F1824*6D*	G*E80603B*B*	23,000	17,000	14.0	11.5	860	6498394
	CA*F1824*6D*	A*VC80604B*B*	23,000	17,000	14.0	11.6	820	5188200
	CA*F1824*6D*	A*EC960603BNA*	23,000	17,000	14.0	11.5	775	7366736
	CA*F1824*6D*	A*VC960403BNA*	23,000	17,000	14.0	11.5	805	7358425
	CA*F1824*6D*	G*EC960402BNA*	23,000	17,000	14.0	11.5	775	7366628
	CA*F1824*6D*	G*VM970803BNA*	23,000	17,000	14.0	11.5	810	7358437
	CA*F1824*6D*	G*EC960302BNA*	23,000	17,000	14.0	11.5	800	7366623
	CA*F1824*6D*	A*VM970603BNA*	23,000	17,000	14.0	11.5	815	7358429
	CA*F1824*6D*	A*EH800603B*A*	23,000	17,000	14.0	11.5	860	6945809
	CA*F1824*6D*	A*VC960803BNA*	23,000	17,000	14.0	11.5	810	7358427
	CA*F1824*6D*	A*VC960603BNA*	23,000	17,000	14.0	11.5	815	7358426
	CA*F1824*6D*	G*VM970603BNA*	23,000	17,000	14.0	11.5	815	7358436
	CA*F1824*6D*	G*EC960603BNA*	23,000	17,000	14.0	11.5	775	7366633
	CA*F1824*6D*	G*VM970804CNA*	23,000	17,000	14.0	11.5	800	7358438
	CA*F1824*6D*	G*VC960803BNA*	23,000	17,000	14.0	11.5	810	7358434
	CA*F1824*6D*	A*VM970803BNA*	23,000	17,000	14.0	11.5	810	7358430
	CA*F1824*6D*	A*EC960803BNA*	23,000	17,000	14.0	11.5	775	7366741
	CA*F1824*6D*	G*VC960403BNA*	23,000	17,000	14.0	11.5	805	7358432
	CA*F1824*6D*	G*EC960803BNA*	23,000	17,000	14.0	11.5	775	7366638
	CA*F1824*6D*	G*VC960804CNA*	23,000	17,000	14.0	11.5	800	7358435
	CA*F1824*6D*	G*VC80604B*B*	23,000	17,000	14.0	11.6	820	5188201
	CA*F1824*6D*	A*EC960402BNA*	23,000	17,000	14.0	11.5	775	7366731
	CA*F1824*6D*+EEP		23,000	17,000	13.0	11.0	800	4150349
	CA*F1824*6D*+MBVC1200**-1A*		23,000	17,000	14.0	11.5	800	6498398
	CA*F1824*6D*+TXV	A*EC960303ANA*	23,000	17,000	14.0	11.5	800	10516221
	CA*F1824*6D*+TXV	A*EC960403ANA*	23,000	17,000	14.0	11.5	800	10516226
	CA*F1824*6D*+TXV	A*EC960603ANA*	23,000	17,000	14.0	11.5	775	10516218
	CA*F1824*6D*+TXV	G*VC960803BNA*	23,000	17,000	14.0	11.5	810	7358448
	CA*F1824*6D*+TXV	G*EC960302BNA*	23,000	17,000	14.0	11.5	800	7366624
	CA*F1824*6D*+TXV	A*VM970803BNA*	23,000	17,000	14.0	11.5	810	7358444
	CA*F1824*6D*+TXV	G*EC960603BNA*	23,000	17,000	14.0	11.5	775	7366634
	CA*F1824*6D*+TXV	G*VM970804CNA*	23,000	17,000	14.0	11.5	800	7358452
	CA*F1824*6D*+TXV	A*VC960804CNA*	23,000	17,000	14.0	11.5	800	7358442
	CA*F1824*6D*+TXV	A*EC960603BNA*	23,000	17,000	14.0	11.5	775	7366737
	CA*F1824*6D*+TXV	A*EC960803BNA*	23,000	17,000	14.0	11.5	775	7366742
	CA*F1824*6D*+TXV	G*EC960402BNA*	23,000	17,000	14.0	11.5	775	7366629
	CA*F1824*6D*+TXV	G*VM970603BNA*	23,000	17,000	14.0	11.5	815	7358450
	CA*F1824*6D*+TXV	A*EC960402BNA*	23,000	17,000	14.0	11.5	775	7366732
	CA*F1824*6D*+TXV	G*VC960804CNA*	23,000	17,000	14.0	11.5	800	7358449
	CA*F1824*6D*+TXV	A*VM970603BNA*	23,000	17,000	14.0	11.5	815	7358443
	CA*F1824*6D*+TXV	A*VM970804CNA*	23,000	17,000	14.0	11.5	800	7358445
	CA*F1824*6D*+TXV	G*EC960803BNA*	23,000	17,000	14.0	11.5	775	7366639
	CA*F1824*6D*+TXV	G*VM970803BNA*	23,000	17,000	14.0	11.5	810	7358451
	CA*F1824*6D*+TXV	A*EC960302BNA*	23,000	17,000	14.0	11.5	800	7366727
	CA*F1824*6D*+TXV	G*VC960403BNA*	23,000	17,000	14.0	11.5	805	7358446

See Notes on Page 48.

Outdoor Unit	Indoor Units		Cooling Ratings				CFM	AHRI #
	Coils/Air Handlers	Furnaces	Total[1]	Sens.[1]	SEER[2]	EER[3]		
ASX13 0241C* (Contd.)	CA*F1824*6D*+TXV	G*VC960603BNA*	23,000	17,000	14.0	11.5	815	7358447
	CA*F1824*6D*+TXV	A*VC960403BNA*	23,000	17,000	14.0	11.5	805	7358439
	CA*F1824*6D*+TXV	A*VC960603BNA*	23,000	17,000	14.0	11.5	815	7358440
	CA*F1824*6D*+TXV	A*VC960803BNA*	23,000	17,000	14.0	11.5	810	7358441
	CA*F3030*6D*+EEP		23,000	17,000	13.0	11.0	800	5582216
	CA*F3030*6D*+EEP+TXV		23,000	17,000	13.0	11.0	800	5582580
	CA*F3131*6D*+EEP		23,000	17,000	13.0	11.0	800	5582217
	CA*F3131*6D*+EEP+TXV		23,000	17,000	13.0	11.0	800	5582218
	CA*F3636*6D*	G*VM970603BNA*	23,600	17,500	14.0	11.5	815	7358461
	CA*F3636*6D*	G*VC960403BNA*	23,600	17,500	14.0	11.5	805	7358458
	CA*F3636*6D*	A*VM970603BNA*	23,600	17,500	14.0	11.5	815	7358456
	CA*F3636*6D*	A*VC960803BNA*	23,600	17,500	14.0	11.5	810	7358455
	CA*F3636*6D*	G*VC960803BNA*	23,600	17,500	14.0	11.5	810	7358460
	CA*F3636*6D*	G*VM970803BNA*	23,600	17,500	14.0	11.5	810	7358462
	CA*F3636*6D*	A*VM970803BNA*	23,600	17,500	14.0	11.5	810	7358457
	CA*F3636*6D*	A*VC960403BNA*	23,600	17,500	14.0	11.5	805	7358453
	CA*F3636*6D*	A*VC960603BNA*	23,600	17,500	14.0	11.5	815	7358454
	CA*F3636*6D*	G*VC960603BNA*	23,600	17,500	14.0	11.5	815	7358459
	CA*F3636*6D*+EEP		23,000	17,000	13.0	11.0	800	5582219
	CA*F3636*6D*+EEP+TXV		23,000	17,000	13.0	11.0	800	5582619
	CA*F3636*6D*+TXV	G*VC960603BNA*	23,600	17,500	14.0	11.5	815	7358469
	CA*F3636*6D*+TXV	A*VC960403BNA*	23,600	17,500	14.0	11.5	805	7358463
	CA*F3636*6D*+TXV	A*VM970603BNA*	23,600	17,500	14.0	11.5	815	7358466
	CA*F3636*6D*+TXV	A*VC960803BNA*	23,600	17,500	14.0	11.5	810	7358465
	CA*F3636*6D*+TXV	G*VM970603BNA*	23,600	17,500	14.0	11.5	815	7358471
	CA*F3636*6D*+TXV	A*VC960603BNA*	23,600	17,500	14.0	11.5	815	7358464
	CA*F3636*6D*+TXV	G*VC960803BNA*	23,600	17,500	14.0	11.5	810	7358470
	CA*F3636*6D*+TXV	G*VC960403BNA*	23,600	17,500	14.0	11.5	805	7358468
	CA*F3636*6D*+TXV	G*VM970803BNA*	23,600	17,500	14.0	11.5	810	7358472
	CA*F3636*6D*+TXV	A*VM970803BNA*	23,600	17,500	14.0	11.5	810	7358467
	CA*F3743*6D*	A*VC960804CNA*	23,600	17,500	14.0	11.5	800	7358473
	CA*F3743*6D*	G*VM970804CNA*	23,600	17,500	14.0	11.5	800	7358476
	CA*F3743*6D*	A*VM970804CNA*	23,600	17,500	14.0	11.5	800	7358474
	CA*F3743*6D*	G*VC960804CNA*	23,600	17,500	14.0	11.5	800	7358475
	CA*F3743*6D*+TXV	G*VC960804CNA*	23,600	17,500	14.0	11.5	800	7358479
	CA*F3743*6D*+TXV	A*VC960804CNA*	23,600	17,500	14.0	11.5	800	7358477
	CA*F3743*6D*+TXV	G*VM970804CNA*	23,600	17,500	14.0	11.5	800	7358480
	CA*F3743*6D*+TXV	A*VM970804CNA*	23,600	17,500	14.0	11.5	800	7358478
	CAPT3131*4A*	A*EC960303ANA*	23,000	17,000	13.5	11.5	800	10516222
	CAPT3131*4A*	A*EC960403ANA*	23,000	17,000	13.5	11.5	800	10516227
	CAPT3131*4A*	A*EC960603ANA*	23,000	17,000	13.5	11.5	775	10516219
	CAPT3131*4A*	G*VC80604B*B*	23,000	17,000	14.0	11.5	830	5948564
	CAPT3131*4A*	G*VC960803BNA*	23,000	17,000	14.0	11.5	810	7358490
	CAPT3131*4A*	G*VC960403BNA*	23,000	17,000	14.0	11.5	805	7358488
	CAPT3131*4A*	A*EC960603BNA*	23,000	17,000	14.0	11.5	775	7366738
	CAPT3131*4A*	A*EC960402BNA*	23,000	17,000	14.0	11.5	775	7366733
	CAPT3131*4A*	A*VC960603BNA*	23,000	17,000	14.0	11.5	815	7358482
	CAPT3131*4A*	G*VM970803BNA*	23,000	17,000	14.0	11.5	810	7358493
	CAPT3131*4A*	G*VC960603BNA*	23,000	17,000	14.0	11.5	815	7358489
	CAPT3131*4A*	G*EC960603BNA*	23,000	17,000	14.0	11.5	775	7366635
	CAPT3131*4A*	G*VM970804CNA*	23,000	17,000	14.0	11.5	800	7358494
	CAPT3131*4A*	A*VC80604B*B*	23,000	17,000	14.0	11.5	830	5948556
	CAPT3131*4A*	A*EC960803BNA*	23,000	17,000	14.0	11.5	775	7366743

See Notes on Page 48.

Outdoor Unit	Indoor Units		Cooling Ratings				CFM	AHRI #
	Coils/Air Handlers	Furnaces	Total[1]	Sens.[1]	SEER[2]	EER[3]		
ASX13 0241C* (Contd.)	CAPT3131*4A*	A*VC960803BNA*	23,000	17,000	14.0	11.5	810	7358483
	CAPT3131*4A*	G*VM970603BNA*	23,000	17,000	14.0	11.5	815	7358492
	CAPT3131*4A*	A*VM970803BNA*	23,000	17,000	14.0	11.5	810	7358486
	CAPT3131*4A*	A*EH800603B*A*	23,000	17,000	14.0	11.5	800	6945812
	CAPT3131*4A*	ADVC80603B*B*	23,000	17,000	14.0	11.5	800	5948562
	CAPT3131*4A*	G*EC960803BNA*	23,000	17,000	14.0	11.5	775	7366640
	CAPT3131*4A*	G*E80603B*B*	23,000	17,000	14.0	11.5	800	5948563
	CAPT3131*4A*	A*EC960302BNA*	23,000	17,000	14.0	11.5	800	7366728
	CAPT3131*4A*	G*EC960302BNA*	23,000	17,000	14.0	11.5	800	7366625
	CAPT3131*4A*	A*VC960804CNA*	23,000	17,000	14.0	11.5	800	7358484
	CAPT3131*4A*	G*VC960804CNA*	23,000	17,000	14.0	11.5	800	7358491
	CAPT3131*4A*	A*VM970603BNA*	23,000	17,000	14.0	11.5	815	7358485
	CAPT3131*4A*	A*VC960403BNA*	23,000	17,000	14.0	11.5	805	7358481
	CAPT3131*4A*	A*VM970804CNA*	23,000	17,000	14.0	11.5	800	7358487
	CAPT3131*4A*	G*EC960402BNA*	23,000	17,000	14.0	11.5	775	7366630
	CAPT3131*4A*+EEP		22,800	16,900	13.0	11.0	800	5611356
	CAPT3131*4A*+MBVC1200**-1A*		22,800	16,900	14.0	11.5	800	5611357
	CAPT3743*4A*	A*VC960804CNA*	23,600	17,500	14.0	11.5	800	7358495
	CAPT3743*4A*	A*VM970804CNA*	23,600	17,500	14.0	11.5	800	7358496
	CAPT3743*4A*	G*VM970804CNA*	23,600	17,500	14.0	11.5	800	7358498
	CAPT3743*4A*	G*VC960804CNA*	23,600	17,500	14.0	11.5	800	7358497
	CHPF1824A6C*+EEP		23,000	17,000	13.0	11.0	800	3839027
	CHPF2430B6C*	A*EC960303ANA*	23,000	17,000	13.5	11.5	800	10516223
	CHPF2430B6C*	A*EC960403ANA*	23,000	17,000	13.5	11.5	800	10516228
	CHPF2430B6C*	A*EC960603ANA*	23,000	17,000	13.5	11.5	775	10516230
	CHPF2430B6C*	A*EC960402BNA*	23,000	17,000	14.0	11.5	775	7366734
	CHPF2430B6C*	G*VM970603BNA*	23,200	17,200	14.0	11.5	815	7358507
	CHPF2430B6C*	A*EC960302BNA*	23,000	17,000	14.0	11.5	800	7366729
	CHPF2430B6C*	A*VC960803BNA*	23,200	17,200	14.0	11.5	810	7358501
	CHPF2430B6C*	G*EC960402BNA*	23,000	17,000	14.0	11.5	775	7366631
	CHPF2430B6C*	A*VC960603BNA*	23,200	17,200	14.0	11.5	815	7358500
	CHPF2430B6C*	A*VC960403BNA*	23,200	17,200	14.0	11.5	805	7358499
	CHPF2430B6C*	A*EC960603BNA*	23,000	17,000	14.0	11.5	775	7366739
	CHPF2430B6C*	G*VC960803BNA*	23,200	17,200	14.0	11.5	810	7358506
	CHPF2430B6C*	G*VC960403BNA*	23,200	17,200	14.0	11.5	805	7358504
	CHPF2430B6C*	A*VM970603BNA*	23,200	17,200	14.0	11.5	815	7358502
	CHPF2430B6C*	A*EC960803BNA*	23,000	17,000	14.0	11.5	775	7366744
	CHPF2430B6C*	G*EC960302BNA*	23,000	17,000	14.0	11.5	800	7366626
	CHPF2430B6C*	G*EC960803BNA*	23,000	17,000	14.0	11.5	775	7366641
	CHPF2430B6C*	A*EH800603B*A*	23,000	17,000	14.0	11.5	860	6945815
	CHPF2430B6C*	A*VM970803BNA*	23,200	17,200	14.0	11.5	810	7358503
	CHPF2430B6C*	G*VC960603BNA*	23,200	17,200	14.0	11.5	815	7358505
	CHPF2430B6C*	G*E80603B*B*	23,000	17,000	14.0	11.5	860	6498399
	CHPF2430B6C*	G*VM970803BNA*	23,200	17,200	14.0	11.5	810	7358508
	CHPF2430B6C*	G*EC960603BNA*	23,000	17,000	14.0	11.5	775	7366636
	CHPF2430B6C*+EEP		23,000	17,000	13.0	11.0	800	3839031
	CHPF2430B6C*+MBVC1200**-1A*		23,400	17,300	14.0	11.5	800	6498402
	CHPF2430B6C*+TXV	A*EC960303ANA*	23,000	17,000	14.0	11.5	800	10516224
	CHPF2430B6C*+TXV	A*EC960403ANA*	23,000	17,000	14.0	11.5	800	10516229
	CHPF2430B6C*+TXV	A*EC960603ANA*	23,000	17,000	14.0	11.5	775	10516231
	CHPF2430B6C*+TXV	G*VM970603BNA*	23,200	17,200	14.0	11.5	815	7358517
	CHPF2430B6C*+TXV	G*VC960803BNA*	23,200	17,200	14.0	11.5	810	7358516
	CHPF2430B6C*+TXV	A*EC960603BNA*	23,000	17,000	14.0	11.5	775	7366740

See Notes on Page 48.

Outdoor Unit	Indoor Units		Cooling Ratings				CFM	AHRI #
	Coils/Air Handlers	Furnaces	Total[1]	Sens.[1]	SEER[2]	EER[3]		
ASX13 0241C* (Contd.)	CHPF2430B6C*+TXV	G*VC960403BNA*	23,200	17,200	14.0	11.5	805	7358514
	CHPF2430B6C*+TXV	G*EC960402BNA*	23,000	17,000	14.0	11.5	775	7366632
	CHPF2430B6C*+TXV	A*EC960803BNA*	23,000	17,000	14.0	11.5	775	7366745
	CHPF2430B6C*+TXV	G*EC960603BNA*	23,000	17,000	14.0	11.5	775	7366637
	CHPF2430B6C*+TXV	A*VC960803BNA*	23,200	17,200	14.0	11.5	810	7358511
	CHPF2430B6C*+TXV	G*EC960803BNA*	23,000	17,000	14.0	11.5	775	7366642
	CHPF2430B6C*+TXV	A*EC960402BNA*	23,000	17,000	14.0	11.5	775	7366735
	CHPF2430B6C*+TXV	A*EC960302BNA*	23,000	17,000	14.0	11.5	800	7366730
	CHPF2430B6C*+TXV	A*VC960403BNA*	23,200	17,200	14.0	11.5	805	7358509
	CHPF2430B6C*+TXV	G*VC960603BNA*	23,200	17,200	14.0	11.5	815	7358515
	CHPF2430B6C*+TXV	G*VM970803BNA*	23,200	17,200	14.0	11.5	810	7358518
	CHPF2430B6C*+TXV	A*VM970603BNA*	23,200	17,200	14.0	11.5	815	7358512
	CHPF2430B6C*+TXV	A*VC960603BNA*	23,200	17,200	14.0	11.5	815	7358510
	CHPF2430B6C*+TXV	G*EC960302BNA*	23,000	17,000	14.0	11.5	800	7366627
	CHPF2430B6C*+TXV	A*VM970803BNA*	23,200	17,200	14.0	11.5	810	7358513
	CHPF3636B6C*	G*VM970803BNA*	23,400	17,300	14.0	11.5	810	7358528
	CHPF3636B6C*	G*VC960403BNA*	23,400	17,300	14.0	11.5	805	7358524
	CHPF3636B6C*	G*VC960803BNA*	23,400	17,300	14.0	11.5	810	7358526
	CHPF3636B6C*	G*VC960603BNA*	23,400	17,300	14.0	11.5	815	7358525
	CHPF3636B6C*	A*VM970803BNA*	23,400	17,300	14.0	11.5	810	7358523
	CHPF3636B6C*	G*VM970603BNA*	23,400	17,300	14.0	11.5	815	7358527
	CHPF3636B6C*	A*VC960603BNA*	23,400	17,300	14.0	11.5	815	7358520
	CHPF3636B6C*	A*VC960803BNA*	23,400	17,300	14.0	11.5	810	7358521
	CHPF3636B6C*	A*VC960403BNA*	23,400	17,300	14.0	11.5	805	7358519
	CHPF3636B6C*	A*VM970603BNA*	23,400	17,300	14.0	11.5	815	7358522
	CHPF3636B6C*+TXV	A*VM970603BNA*	23,400	17,300	14.0	11.5	815	7358532
	CHPF3636B6C*+TXV	A*VC960803BNA*	23,400	17,300	14.0	11.5	810	7358531
	CHPF3636B6C*+TXV	G*VM970803BNA*	23,400	17,300	14.0	11.5	810	7358538
	CHPF3636B6C*+TXV	A*VC960603BNA*	23,400	17,300	14.0	11.5	815	7358530
	CHPF3636B6C*+TXV	A*VC960403BNA*	23,400	17,300	14.0	11.5	805	7358529
	CHPF3636B6C*+TXV	G*VC960603BNA*	23,400	17,300	14.0	11.5	815	7358535
	CHPF3636B6C*+TXV	A*VM970803BNA*	23,400	17,300	14.0	11.5	810	7358533
	CHPF3636B6C*+TXV	G*VM970603BNA*	23,400	17,300	14.0	11.5	815	7358537
	CHPF3636B6C*+TXV	G*VC960803BNA*	23,400	17,300	14.0	11.5	810	7358536
	CHPF3636B6C*+TXV	G*VC960403BNA*	23,400	17,300	14.0	11.5	805	7358534
	CHPF3642C6C*	G*VC960804CNA*	23,400	17,300	14.0	11.5	800	7358541
	CHPF3642C6C*	G*VM970804CNA*	23,400	17,300	14.0	11.5	800	7358542
	CHPF3642C6C*	A*VC960804CNA*	23,400	17,300	14.0	11.5	800	7358539
	CHPF3642C6C*	A*VM970804CNA*	23,400	17,300	14.0	11.5	800	7358540
	CHPF3642C6C*+TXV	G*VC960804CNA*	23,400	17,300	14.0	11.5	800	7358545
	CHPF3642C6C*+TXV	G*VM970804CNA*	23,400	17,300	14.0	11.5	800	7358546
	CHPF3642C6C*+TXV	A*VC960804CNA*	23,400	17,300	14.0	11.5	800	7358543
	CHPF3642C6C*+TXV	A*VM970804CNA*	23,400	17,300	14.0	11.5	800	7358544
	CSCF1824N6D*	A*VC960403BNA*	23,000	17,000	14.0	11.5	805	7358547
	CSCF1824N6D*	G*VC960803BNA*	23,000	17,000	14.0	11.5	810	7358556
	CSCF1824N6D*	A*VM970603BNA*	23,000	17,000	14.0	11.5	815	7358551
	CSCF1824N6D*	A*VM970803BNA*	23,000	17,000	14.0	11.5	810	7358552
	CSCF1824N6D*	A*VC960603BNA*	23,000	17,000	14.0	11.5	815	7358548
	CSCF1824N6D*	G*VM970603BNA*	23,000	17,000	14.0	11.5	815	7358558
	CSCF1824N6D*	A*VM970804CNA*	23,000	17,000	14.0	11.5	800	7358553
	CSCF1824N6D*	A*VC960803BNA*	23,000	17,000	14.0	11.5	810	7358549
	CSCF1824N6D*	G*VC960603BNA*	23,000	17,000	14.0	11.5	815	7358555
	CSCF1824N6D*	A*VC960804CNA*	23,000	17,000	14.0	11.5	800	7358550

See Notes on Page 48.

Outdoor Unit	Indoor Units		Cooling Ratings				CFM	AHRI #
	Coils/Air Handlers	Furnaces	Total[1]	Sens.[1]	SEER[2]	EER[3]		
ASX13 0241C* (Contd.)	CSCF1824N6D*	G*VM970803BNA*	23,000	17,000	14.0	11.5	810	7358559
	CSCF1824N6D*	G*VM970804CNA*	23,000	17,000	14.0	11.5	800	7358560
	CSCF1824N6D*	G*VC960403BNA*	23,000	17,000	14.0	11.5	805	7358554
	CSCF1824N6D*	G*VC960804CNA*	23,000	17,000	14.0	11.5	800	7358557
	CSCF1824N6D*+EEP		23,000	17,000	13.0	11.0	800	4767333
	CSCF1824N6D*+TXV	A*VM970603BNA*	23,000	17,000	14.0	11.5	815	7358565
	CSCF1824N6D*+TXV	G*VC960603BNA*	23,000	17,000	14.0	11.5	815	7358569
	CSCF1824N6D*+TXV	A*VM970803BNA*	23,000	17,000	14.0	11.5	810	7358566
	CSCF1824N6D*+TXV	G*VC960403BNA*	23,000	17,000	14.0	11.5	805	7358568
	CSCF1824N6D*+TXV	G*VC960803BNA*	23,000	17,000	14.0	11.5	810	7358570
	CSCF1824N6D*+TXV	G*VM970603BNA*	23,000	17,000	14.0	11.5	815	7358572
	CSCF1824N6D*+TXV	A*VC960403BNA*	23,000	17,000	14.0	11.5	805	7358561
	CSCF1824N6D*+TXV	A*VC960804CNA*	23,000	17,000	14.0	11.5	800	7358564
	CSCF1824N6D*+TXV	G*VM970804CNA*	23,000	17,000	14.0	11.5	800	7358574
	CSCF1824N6D*+TXV	A*VC960803BNA*	23,000	17,000	14.0	11.5	810	7358563
	CSCF1824N6D*+TXV	A*VC960603BNA*	23,000	17,000	14.0	11.5	815	7358562
	CSCF1824N6D*+TXV	A*VM970804CNA*	23,000	17,000	14.0	11.5	800	7358567
	CSCF1824N6D*+TXV	G*VC960804CNA*	23,000	17,000	14.0	11.5	800	7358571
	CSCF1824N6D*+TXV	G*VM970803BNA*	23,000	17,000	14.0	11.5	810	7358573
	CSCF3036N6D*	A*VC960804CNA*	23,200	17,200	14.0	11.5	800	7358578
	CSCF3036N6D*	A*VM970804CNA*	23,200	17,200	14.0	11.5	800	7358581
	CSCF3036N6D*	A*VC960803BNA*	23,200	17,200	14.0	11.5	810	7358577
	CSCF3036N6D*	A*VC960603BNA*	23,200	17,200	14.0	11.5	815	7358576
	CSCF3036N6D*	G*VC960803BNA*	23,200	17,200	14.0	11.5	810	7358584
	CSCF3036N6D*	A*VM970603BNA*	23,200	17,200	14.0	11.5	815	7358579
	CSCF3036N6D*	G*VC960403BNA*	23,200	17,200	14.0	11.5	805	7358582
	CSCF3036N6D*	G*VM970804CNA*	23,200	17,200	14.0	11.5	800	7358588
	CSCF3036N6D*	A*VC960403BNA*	23,200	17,200	14.0	11.5	805	7358575
	CSCF3036N6D*	G*VM970803BNA*	23,200	17,200	14.0	11.5	810	7358587
	CSCF3036N6D*	G*VM970603BNA*	23,200	17,200	14.0	11.5	815	7358586
	CSCF3036N6D*	A*VM970803BNA*	23,200	17,200	14.0	11.5	810	7358580
	CSCF3036N6D*	G*VC960603BNA*	23,200	17,200	14.0	11.5	815	7358583
	CSCF3036N6D*	G*VC960804CNA*	23,200	17,200	14.0	11.5	800	7358585
	CSCF3036N6D*+TXV	G*VC960803BNA*	23,200	17,200	14.0	11.5	810	7358598
	CSCF3036N6D*+TXV	G*VC960403BNA*	23,200	17,200	14.0	11.5	805	7358596
	CSCF3036N6D*+TXV	G*VM970803BNA*	23,200	17,200	14.0	11.5	810	7358601
	CSCF3036N6D*+TXV	A*VC960804CNA*	23,200	17,200	14.0	11.5	800	7358592
	CSCF3036N6D*+TXV	A*VM970803BNA*	23,200	17,200	14.0	11.5	810	7358594
	CSCF3036N6D*+TXV	A*VC960403BNA*	23,200	17,200	14.0	11.5	805	7358589
	CSCF3036N6D*+TXV	G*VM970804CNA*	23,200	17,200	14.0	11.5	800	7358602
	CSCF3036N6D*+TXV	G*VM970603BNA*	23,200	17,200	14.0	11.5	815	7358600
	CSCF3036N6D*+TXV	G*VC960603BNA*	23,200	17,200	14.0	11.5	815	7358597
	CSCF3036N6D*+TXV	A*VM970603BNA*	23,200	17,200	14.0	11.5	815	7358593
	CSCF3036N6D*+TXV	G*VC960804CNA*	23,200	17,200	14.0	11.5	800	7358599
	CSCF3036N6D*+TXV	A*VC960603BNA*	23,200	17,200	14.0	11.5	815	7358590
	CSCF3036N6D*+TXV	A*VC960803BNA*	23,200	17,200	14.0	11.5	810	7358591
	CSCF3036N6D*+TXV	A*VM970804CNA*	23,200	17,200	14.0	11.5	800	7358595
ASX13 0301C*	ACNF30XX16D*		27,600	21,000	13.0	11.0	890	5996194
	ARUF29B14A*		28,400	21,600	13.0	11.0	1,065	8000273
	ARUF30B14A*+TXV		27,000	20,600	13.0	11.0	900	5385500
	ARUF36C14B*+TXV		27,200	20,600	13.5	11.5	1,000	5647208
	ASPT36C14A*		28,000	21,400	14.0	12.0	1,010	5722584
	ASPT37B14A*		29,000	22,000	14.0	12.0	950	8245604

See Notes on Page 48.

Outdoor Unit	Indoor Units		Cooling Ratings				CFM	AHRI #
	Coils/Air Handlers	Furnaces	Total[1]	Sens.[1]	SEER[2]	EER[3]		
ASX13 0301C* (Contd.)	ASPT39C14B*		28,000	21,300	14.0	12.0	1,000	201834843
	AVPTC25B14A*		28,000	21,400	13.5	11.5	875	8996340
	AVPTC29B14A*		28,400	21,600	14.0	12.0	925	8996341
	AVPTC31C14A*		29,000	22,000	14.0	12.0	930	8996342
	AVPTC36C14A*		28,000	21,400	14.0	12.0	1,015	5924464
	AVPTC39C14A*		28,400	21,600	14.0	11.5	965	10221064
	AWUF30XX16B*		27,600	21,000	13.0	11.0	1,000	4559613
	AWUF36XX16B*		27,800	21,200	13.0	11.0	1,000	4559614
	AWUF37XX16B*		28,000	21,400	13.0	11.0	1,000	4559615
	CA*F3030*6D*	A*EC960403BNA*	28,400	21,600	13.5	11.5	1,000	10338568
	CA*F3030*6D*	A*VC80604B*B*	28,200	21,400	13.5	11.3	1,050	5188202
	CA*F3030*6D*	G*EC960302BNA*	28,000	21,400	13.5	11.5	1,000	7366643
	CA*F3030*6D*	G*VC960403BNA*	28,400	21,600	14.0	11.5	1,000	7358610
	CA*F3030*6D*	A*VC960403BNA*	28,400	21,600	14.0	11.5	1,000	7358603
	CA*F3030*6D*	A*EC960303ANA*	28,000	21,400	13.5	11.5	975	10516233
	CA*F3030*6D*	A*EC960403ANA*	28,400	21,600	13.0	11.5	975	10516239
	CA*F3030*6D*	A*EC960603BNA*	28,400	21,600	13.5	11.5	1,000	7366761
	CA*F3030*6D*	A*VC960603BNA*	28,400	21,600	14.0	11.5	1,000	7358604
	CA*F3030*6D*	G*VM970603BNA*	28,400	21,600	14.0	11.5	1,000	7358614
	CA*F3030*6D*	A*VC960803BNA*	28,400	21,600	14.0	11.5	1,030	7358605
	CA*F3030*6D*	G*VC960803BNA*	28,400	21,600	14.0	11.5	1,030	7358612
	CA*F3030*6D*	G*VM970804CNA*	28,400	21,600	14.0	11.5	1,000	7358616
	CA*F3030*6D*	A*EC960402BNA*	28,400	21,600	13.5	11.5	1,000	7366753
	CA*F3030*6D*	A*VC960804CNA*	28,400	21,600	14.0	11.5	1,000	7358606
	CA*F3030*6D*	ADVC80603B*B*	28,000	21,400	13.5	11.3	1,050	5188403
	CA*F3030*6D*	A*VM970803BNA*	28,400	21,600	14.0	11.5	1,030	7358608
	CA*F3030*6D*	A*EC960302BNA*	28,000	21,400	13.5	11.5	1,000	7366746
	CA*F3030*6D*	G*VM970803BNA*	28,400	21,600	14.0	11.5	1,030	7358615
	CA*F3030*6D*	G*VC960804CNA*	28,400	21,600	14.0	11.5	1,000	7358613
	CA*F3030*6D*	G*EC960803BNA*	28,400	21,600	13.5	11.5	1,000	7366666
	CA*F3030*6D*	A*VM970603BNA*	28,400	21,600	14.0	11.5	1,000	7358607
	CA*F3030*6D*	G*VC960603BNA*	28,400	21,600	14.0	11.5	1,000	7358611
	CA*F3030*6D*	A*EC960803BNA*	28,400	21,600	13.5	11.5	1,000	7366769
	CA*F3030*6D*	G*EC960402BNA*	28,400	21,600	13.5	11.5	1,000	7366650
	CA*F3030*6D*	G*EC960603BNA*	28,400	21,600	13.5	11.5	1,000	7366658
	CA*F3030*6D*	G*VC80604B*B*	28,200	21,400	13.5	11.3	1,050	5188203
	CA*F3030*6D*	A*VM970804CNA*	28,400	21,600	14.0	11.5	1,000	7358609
	CA*F3030*6D*+EEP		28,400	21,600	13.0	11.0	1,050	4355524
	CA*F3030*6D*+TXV	A*EC960303ANA*	28,000	21,400	13.5	11.5	975	10516234
	CA*F3030*6D*+TXV	A*EC960403ANA*	28,200	21,400	13.5	11.5	975	10516240
	CA*F3030*6D*+TXV	A*EC960603ANA*	28,000	21,400	13.5	11.3	975	10516232
	CA*F3030*6D*+TXV	A*EC960403BNA*	28,400	21,600	13.5	11.5	1,000	10338569
	CA*F3030*6D*+TXV	A*VM970603BNA*	28,400	21,600	14.0	11.5	1,000	7358621
	CA*F3030*6D*+TXV	G*VM970804CNA*	28,400	21,600	14.0	11.5	1,000	7358630
	CA*F3030*6D*+TXV	G*EC960402BNA*	28,400	21,600	14.0	11.5	1,000	7366651
	CA*F3030*6D*+TXV	G*EC960603BNA*	28,400	21,600	13.5	11.5	1,000	7366659
	CA*F3030*6D*+TXV	A*EC960402BNA*	28,400	21,600	14.0	11.5	1,000	7366754
	CA*F3030*6D*+TXV	A*VC960603BNA*	28,400	21,600	14.0	11.5	1,000	7358618
	CA*F3030*6D*+TXV	G*VC960603BNA*	28,400	21,600	14.0	11.5	1,000	7358625
	CA*F3030*6D*+TXV	G*VC960803BNA*	28,400	21,600	14.0	11.5	1,030	7358626
	CA*F3030*6D*+TXV	G*VC960403BNA*	28,400	21,600	14.0	11.5	1,000	7358624
	CA*F3030*6D*+TXV	G*VM970803BNA*	28,400	21,600	14.0	11.5	1,030	7358629
	CA*F3030*6D*+TXV	G*EC960803BNA*	28,400	21,600	13.5	11.5	1,000	7366667

See Notes on Page 48.

Outdoor Unit	Indoor Units		Cooling Ratings				CFM	AHRI #
	Coils/Air Handlers	Furnaces	Total[1]	Sens.[1]	SEER[2]	EER[3]		
ASX13 0301C* (Contd.)	CA*F3030*6D*+TXV	A*EC960803BNA*	28,400	21,600	13.5	11.5	1,000	7366770
	CA*F3030*6D*+TXV	A*VM970804CNA*	28,400	21,600	14.0	11.5	1,000	7358623
	CA*F3030*6D*+TXV	G*EC960302BNA*	28,400	21,600	14.0	11.5	1,000	7366644
	CA*F3030*6D*+TXV	A*VC960403BNA*	28,400	21,600	14.0	11.5	1,000	7358617
	CA*F3030*6D*+TXV	G*VC960804CNA*	28,400	21,600	14.0	11.5	1,000	7358627
	CA*F3030*6D*+TXV	A*EC960302BNA*	28,400	21,600	14.0	11.5	1,000	7366747
	CA*F3030*6D*+TXV	A*VC960804CNA*	28,400	21,600	14.0	11.5	1,000	7358620
	CA*F3030*6D*+TXV	A*VC960803BNA*	28,400	21,600	14.0	11.5	1,030	7358619
	CA*F3030*6D*+TXV	G*VM970603BNA*	28,400	21,600	14.0	11.5	1,000	7358628
	CA*F3030*6D*+TXV	A*EC960603BNA*	28,400	21,600	13.5	11.5	1,000	7366762
	CA*F3030*6D*+TXV	A*VM970803BNA*	28,400	21,600	14.0	11.5	1,030	7358622
	CA*F3131*6D*	A*EC960303ANA*	28,200	21,400	13.5	11.5	975	10516235
	CA*F3131*6D*	A*EC960403ANA*	28,400	21,600	13.5	11.5	975	10516241
	CA*F3131*6D*	A*EC960403BNA*	28,400	21,600	13.5	11.5	1,000	10338570
	CA*F3131*6D*	G*EC960302BNA*	28,600	21,800	14.0	11.5	1,000	7366645
	CA*F3131*6D*	A*EC960302BNA*	28,600	21,800	14.0	11.5	1,000	7366748
	CA*F3131*6D*	G*EC960803BNA*	28,600	21,800	13.5	11.5	1,000	7366668
	CA*F3131*6D*	A*EC960402BNA*	28,600	21,800	14.0	11.5	1,000	7366755
	CA*F3131*6D*	A*VC80604B*B*	28,200	21,400	13.5	11.5	1,050	5188204
	CA*F3131*6D*	A*EC960603BNA*	28,600	21,800	13.5	11.5	1,000	7366763
	CA*F3131*6D*	G*EC960402BNA*	28,600	21,800	14.0	11.5	1,000	7366652
	CA*F3131*6D*	G*VC80604B*B*	28,200	21,400	13.5	11.5	1,050	5188205
	CA*F3131*6D*	G*EC960603BNA*	28,600	21,800	13.5	11.5	1,000	7366660
	CA*F3131*6D*	ADVC80603B*B*	28,000	21,400	13.5	11.5	1,050	5188393
	CA*F3131*6D*	A*EC960803BNA*	28,600	21,800	13.5	11.5	1,000	7366771
	CA*F3131*6D*+EEP		28,600	21,800	13.0	11.0	1,050	4385600
	CA*F3131*6D*+MBVC1200**-1A*		28,400	21,600	14.0	11.5	950	4385601
	CA*F3131*6D*+TXV	A*EC960303ANA*	28,000	21,400	13.5	11.5	975	10516236
	CA*F3131*6D*+TXV	A*EC960403ANA*	28,400	21,600	13.5	11.5	975	10516242
	CA*F3131*6D*+TXV	A*EC960603ANA*	28,200	21,400	13.5	11.3	975	10516247
	CA*F3131*6D*+TXV	A*EC960403BNA*	28,400	21,600	14.0	11.7	1,000	10338571
	CA*F3131*6D*+TXV	A*EC960803BNA*	28,600	21,800	13.5	11.5	1,000	7366772
	CA*F3131*6D*+TXV	G*EC960603BNA*	28,600	21,800	13.5	11.5	1,000	7366661
	CA*F3131*6D*+TXV	G*EC960402BNA*	28,600	21,800	14.0	11.5	1,000	7366653
	CA*F3131*6D*+TXV	A*EC960302BNA*	28,600	21,800	14.0	11.5	1,000	7366749
	CA*F3131*6D*+TXV	A*EC960402BNA*	28,600	21,800	14.0	11.5	1,000	7366756
	CA*F3131*6D*+TXV	G*EC960803BNA*	28,600	21,800	13.5	11.5	1,000	7366669
	CA*F3131*6D*+TXV	A*EC960603BNA*	28,600	21,800	13.5	11.5	1,000	7366764
	CA*F3131*6D*+TXV	G*EC960302BNA*	28,600	21,800	14.0	11.5	1,000	7366646
	CA*F3137*6A*	A*EC960403ANA*	28,600	21,800	13.5	11.5	975	10516243
	CA*F3137*6A*	A*EC960403BNA*	28,600	21,800	13.5	11.5	1,000	10338572
	CA*F3137*6A*	G*VC960603BNA*	28,400	21,600	14.0	11.5	985	7489641
	CA*F3137*6A*	G*EC960803BNA*	28,400	21,600	13.5	11.5	1,010	7489638
	CA*F3137*6A*	A*VM970803BNA*	28,400	21,600	14.0	11.5	1,025	7489634
	CA*F3137*6A*	G*VM970603BNA*	28,400	21,600	14.0	11.5	985	7489643
	CA*F3137*6A*	A*VC80604B*B*	28,400	21,600	14.0	11.5	990	7489629
	CA*F3137*6A*	G*VC960403BNA*	28,400	21,600	14.0	11.5	985	7489640
	CA*F3137*6A*	G*EC960603BNA*	28,400	21,600	14.0	11.5	1,020	7489637
	CA*F3137*6A*	G*VC960803BNA*	28,400	21,600	14.0	11.5	1,025	7489642
	CA*F3137*6A*	A*EC960402BNA*	28,000	21,400	13.5	11.5	935	7489626
	CA*F3137*6A*	A*VM970603BNA*	28,400	21,600	14.0	11.5	985	7489633
	CA*F3137*6A*	ADVC80603B*B*	28,000	21,400	13.5	11.5	900	7489635
	CA*F3137*6A*	G*EC960402BNA*	28,000	21,400	13.5	11.5	935	7489636

See Notes on Page 48.

Outdoor Unit	Indoor Units		Cooling Ratings				CFM	AHRI #
	Coils/Air Handlers	Furnaces	Total[1]	Sens.[1]	SEER[2]	EER[3]		
ASX13 0301C* (Contd.)	CA*F3137*6A*	A*EC960803BNA*	28,400	21,600	13.5	11.5	1,010	7489628
	CA*F3137*6A*	A*EC960603BNA*	28,400	21,600	14.0	11.5	1,020	7489627
	CA*F3137*6A*	G*VM970803BNA*	28,400	21,600	14.0	11.5	1,025	7489644
	CA*F3137*6A*	A*VC960603BNA*	28,400	21,600	14.0	11.5	985	7489631
	CA*F3137*6A*	A*VC960803BNA*	28,400	21,600	14.0	11.5	1,025	7489632
	CA*F3137*6A*	G*VC80604B*B*	28,400	21,600	14.0	11.5	990	7489639
	CA*F3137*6A*	A*VC960403BNA*	28,400	21,600	14.0	11.5	985	7489630
	CA*F3137*6A*+EEP		28,400	21,600	13.0	11.0	1,000	7489603
	CA*F3137*6A*+EEP+TXV		28,400	21,600	13.5	11.0	1,000	7489604
	CA*F3137*6A*+MBVC1200**-1A*		28,400	21,600	14.0	11.5	1,025	7489605
	CA*F3137*6A*+MBVC1200**-1A*+TXV		28,400	21,600	14.0	11.5	1,025	7489606
	CA*F3137*6A*+TXV	A*EC960403ANA*	28,600	21,800	14.0	11.5	975	10516244
	CA*F3137*6A*+TXV	A*EC960603ANA*	28,400	21,600	13.5	11.3	975	10516248
	CA*F3137*6A*+TXV	A*EC960403BNA*	28,600	21,800	14.0	11.7	1,000	10338573
	CA*F3137*6A*+TXV	A*EC960603BNA*	28,400	21,600	14.0	11.5	1,020	7489608
	CA*F3137*6A*+TXV	G*VC80604B*B*	28,400	21,600	14.0	11.5	990	7489620
	CA*F3137*6A*+TXV	G*EC960402BNA*	28,000	21,400	14.0	11.5	935	7489617
	CA*F3137*6A*+TXV	A*EC960402BNA*	28,000	21,400	14.0	11.5	935	7489607
	CA*F3137*6A*+TXV	G*EC960803BNA*	28,400	21,600	13.5	11.5	1,010	7489619
	CA*F3137*6A*+TXV	G*VC960803BNA*	28,400	21,600	14.0	11.5	1,025	7489623
	CA*F3137*6A*+TXV	A*EC960803BNA*	28,400	21,600	13.5	11.5	1,010	7489609
	CA*F3137*6A*+TXV	G*VC960603BNA*	28,400	21,600	14.0	11.5	985	7489622
	CA*F3137*6A*+TXV	A*VM970603BNA*	28,400	21,600	14.0	11.5	985	7489614
	CA*F3137*6A*+TXV	G*VM970603BNA*	28,400	21,600	14.0	11.5	985	7489624
	CA*F3137*6A*+TXV	A*VM970803BNA*	28,400	21,600	14.0	11.5	1,025	7489615
	CA*F3137*6A*+TXV	ADVC80603B*B*	28,000	21,400	14.0	11.5	900	7489616
	CA*F3137*6A*+TXV	A*VC80604B*B*	28,400	21,600	14.0	11.5	990	7489610
	CA*F3137*6A*+TXV	G*EC960603BNA*	28,400	21,600	14.0	11.5	1,020	7489618
	CA*F3137*6A*+TXV	G*VC960403BNA*	28,400	21,600	14.0	11.5	985	7489621
	CA*F3137*6A*+TXV	A*VC960603BNA*	28,400	21,600	14.0	11.5	985	7489612
	CA*F3137*6A*+TXV	A*VC960403BNA*	28,400	21,600	14.0	11.5	985	7489611
	CA*F3137*6A*+TXV	A*VC960803BNA*	28,400	21,600	14.0	11.5	1,025	7489613
	CA*F3137*6A*+TXV	G*VM970803BNA*	28,400	21,600	14.0	11.5	1,025	7489625
	CA*F3636*6D*+EEP		28,400	21,600	13.0	11.0	1,000	5582220
	CA*F3636*6D*+EEP+TXV		28,400	21,600	13.0	11.0	1,000	5582221
	CA*F3642*6D*+EEP		28,400	21,600	13.0	11.0	1,000	5582222
	CA*F3642*6D*+EEP+TXV		28,400	21,600	13.0	11.0	1,000	5582223
	CA*F3743*6D*	A*VC960804CNA*	28,600	21,800	14.0	11.5	1,000	7358631
	CA*F3743*6D*	G*VC960804CNA*	28,600	21,800	14.0	11.5	1,000	7358633
	CA*F3743*6D*	G*VM970804CNA*	28,600	21,800	14.0	11.5	1,000	7358634
	CA*F3743*6D*	A*VM970804CNA*	28,600	21,800	14.0	11.5	1,000	7358632
	CA*F3743*6D*+EEP		28,400	21,600	13.5	11.0	1,000	5582581
	CA*F3743*6D*+EEP+TXV		28,400	21,600	13.5	11.0	1,000	5582582
	CA*F3743*6D*+TXV	A*EC960403BNA*	28,600	21,800	14.0	11.7	1,000	10338574
	CA*F3743*6D*+TXV	A*EC960402BNA*	28,600	21,800	14.0	11.5	1,000	7366758
	CA*F3743*6D*+TXV	G*EC960402BNA*	28,600	21,800	14.0	11.5	1,000	7366655
	CA*F3743*6D*+TXV	A*EC960803BNA*	28,600	21,800	14.0	11.5	1,000	7366773
	CA*F3743*6D*+TXV	G*EC960603BNA*	28,800	22,000	14.0	11.5	1,000	7366662
	CA*F3743*6D*+TXV	G*VC960804CNA*	28,200	21,400	14.0	11.5	1,000	7358637
	CA*F3743*6D*+TXV	G*VM970804CNA*	28,200	21,400	14.0	11.5	1,000	7358638
	CA*F3743*6D*+TXV	G*EC960803BNA*	28,600	21,800	14.0	11.5	1,000	7366670
	CA*F3743*6D*+TXV	A*EC960603BNA*	28,800	22,000	14.0	11.5	1,000	7366765
	CA*F3743*6D*+TXV	A*VC960804CNA*	28,200	21,400	14.0	11.5	1,000	7358635

See Notes on Page 48.

Outdoor Unit	Indoor Units		Cooling Ratings				CFM	AHRI #
	Coils/Air Handlers	Furnaces	Total[1]	Sens.[1]	SEER[2]	EER[3]		
ASX13 0301C* (Contd.)	CA*F3743*6D*+TXV	A*VM970804CNA*	28,200	21,400	14.0	11.5	1,000	7358636
	CAPT3131*4A*	G*VC960804CNA*	28,000	21,400	13.5	11.5	1,000	7358649
	CAPT3131*4A*	G*VC960803BNA*	28,000	21,400	13.5	11.5	1,030	7358648
	CAPT3131*4A*	G*VC960403BNA*	28,000	21,400	13.5	11.5	1,000	7358646
	CAPT3131*4A*	G*VM970603BNA*	28,400	21,600	14.0	11.5	1,000	7358650
	CAPT3131*4A*	A*VM970804CNA*	28,000	21,400	13.5	11.5	1,000	7358645
	CAPT3131*4A*	A*VM970603BNA*	28,400	21,600	14.0	11.5	1,000	7358643
	CAPT3131*4A*	A*VC960403BNA*	28,000	21,400	13.5	11.5	1,000	7358639
	CAPT3131*4A*	A*VC960804CNA*	28,000	21,400	13.5	11.5	1,000	7358642
	CAPT3131*4A*	A*VC960803BNA*	28,000	21,400	13.5	11.5	1,030	7358641
	CAPT3131*4A*	G*VM970804CNA*	28,000	21,400	13.5	11.5	1,000	7358652
	CAPT3131*4A*	G*VM970803BNA*	28,000	21,400	13.5	11.5	1,030	7358651
	CAPT3131*4A*	G*VC960603BNA*	28,400	21,600	14.0	11.5	1,000	7358647
	CAPT3131*4A*	A*VC960603BNA*	28,400	21,600	14.0	11.5	1,000	7358640
	CAPT3131*4A*	A*VM970803BNA*	28,000	21,400	13.5	11.5	1,030	7358644
	CAPT3743*4A*	A*EC960403BNA*	28,600	21,800	14.0	11.7	1,000	10338575
	CAPT3743*4A*	G*EC960603BNA*	28,600	21,800	13.5	11.5	1,000	7366663
	CAPT3743*4A*	G*E80603B*B*	28,200	21,400	13.5	11.5	1,050	6494056
	CAPT3743*4A*	G*VM970603BNA*	28,200	21,400	13.5	11.5	1,000	7358664
	CAPT3743*4A*	A*VC81005C*B*	28,200	21,400	14.0	12.0	1,000	6494039
	CAPT3743*4A*	A*EC960603BNA*	28,600	21,800	13.5	11.5	1,000	7366766
	CAPT3743*4A*	G*EC960803BNA*	28,600	21,800	13.5	11.5	1,000	7366671
	CAPT3743*4A*	A*EC960402BNA*	28,400	21,600	14.0	11.5	1,000	7366757
	CAPT3743*4A*	A*VC960803BNA*	28,200	21,400	14.0	11.5	1,030	7358655
	CAPT3743*4A*	A*VC960403BNA*	28,200	21,400	14.0	11.5	1,000	7358653
	CAPT3743*4A*	A*VC960804CNA*	28,200	21,400	14.0	11.5	1,000	7358656
	CAPT3743*4A*	G*VC960403BNA*	28,200	21,400	14.0	11.5	1,000	7358660
	CAPT3743*4A*	G*EC960402BNA*	28,400	21,600	14.0	11.5	1,000	7366654
	CAPT3743*4A*	ADVC80603B*B*	28,000	21,400	13.5	11.5	1,000	6494053
	CAPT3743*4A*	A*VC80604B*B*	28,200	21,400	14.0	12.0	1,000	6494037
	CAPT3743*4A*	A*VM970603BNA*	28,200	21,400	13.5	11.5	1,000	7358657
	CAPT3743*4A*	ADVC81005C*B*	28,000	21,400	14.0	12.0	1,010	6494055
	CAPT3743*4A*	G*VC80805C*B*	28,200	21,400	14.0	12.0	980	6494061
	CAPT3743*4A*	G*VM970803BNA*	28,200	21,400	14.0	11.5	1,030	7358665
	CAPT3743*4A*	G*VC81005C*B*	28,200	21,400	14.0	12.0	1,000	6494062
	CAPT3743*4A*	A*EC960302BNA*	28,400	21,600	14.0	11.5	1,000	7366750
	CAPT3743*4A*	A*VC80805C*B*	28,200	21,400	14.0	12.0	980	6494038
	CAPT3743*4A*	G*EC960302BNA*	28,400	21,600	14.0	11.5	1,000	7366647
	CAPT3743*4A*	G*VC960804CNA*	28,200	21,400	14.0	11.5	1,000	7358663
	CAPT3743*4A*	A*EH800603B*A*	28,200	21,400	13.5	11.5	1,050	6945821
	CAPT3743*4A*	A*VM970803BNA*	28,200	21,400	14.0	11.5	1,030	7358658
	CAPT3743*4A*	G*VC960803BNA*	28,200	21,400	14.0	11.5	1,030	7358662
	CAPT3743*4A*	G*VC80604B*B*	28,200	21,400	14.0	12.0	1,000	6494060
	CAPT3743*4A*	A*VM970804CNA*	28,200	21,400	14.0	11.5	1,000	7358659
	CAPT3743*4A*	G*VC960603BNA*	28,200	21,400	13.5	11.5	1,000	7358661
	CAPT3743*4A*	G*VM970804CNA*	28,200	21,400	14.0	11.5	1,000	7358666
	CAPT3743*4A*	A*EC960803BNA*	28,600	21,800	13.5	11.5	1,000	7366774
	CAPT3743*4A*	ADVC80805C*B*	28,000	21,400	14.0	12.0	990	6494054
	CAPT3743*4A*	A*VC960603BNA*	28,200	21,400	13.5	11.5	1,000	7358654
	CAPT3743*4A*+EEP		28,200	21,400	13.0	11.0	1,000	5611358
	CAPT3743*4A*+MBVC1200**-1A*		28,000	21,400	14.0	11.5	900	6494059
	CAPT3743*4A*+MBVC1600**-1A*		28,200	21,400	14.0	11.5	1,000	5611359
	CHPF2430B6C*	A*EC960303ANA*	28,400	21,600	13.5	11.5	975	10516237

See Notes on Page 48.

Outdoor Unit	Indoor Units		Cooling Ratings				CFM	AHRI #
	Coils/Air Handlers	Furnaces	Total[1]	Sens.[1]	SEER[2]	EER[3]		
ASX13 0301C* (Contd.)	CHPF2430B6C*	A*EC960403ANA*	28,400	21,600	13.5	11.5	975	10516245
	CHPF2430B6C*	A*EC960403BNA*	28,400	21,600	13.5	11.5	1,000	10338576
	CHPF2430B6C*	G*VC960803BNA*	28,400	21,600	14.0	11.5	1,030	7358674
	CHPF2430B6C*	A*EC960402BNA*	28,400	21,600	14.0	11.5	1,000	7366759
	CHPF2430B6C*	A*EC960302BNA*	28,400	21,600	14.0	11.5	1,000	7366751
	CHPF2430B6C*	G*VC960403BNA*	28,400	21,600	14.0	11.5	1,000	7358672
	CHPF2430B6C*	G*VM970603BNA*	28,400	21,600	14.0	11.5	1,000	7358675
	CHPF2430B6C*	A*VM970603BNA*	28,400	21,600	14.0	11.5	1,000	7358670
	CHPF2430B6C*	A*VC960603BNA*	28,400	21,600	14.0	11.5	1,000	7358668
	CHPF2430B6C*	A*VC960403BNA*	28,400	21,600	14.0	11.5	1,000	7358667
	CHPF2430B6C*	G*VM970803BNA*	28,400	21,600	14.0	11.5	1,030	7358676
	CHPF2430B6C*	G*EC960302BNA*	28,400	21,600	14.0	11.5	1,000	7366648
	CHPF2430B6C*	A*VM970803BNA*	28,400	21,600	14.0	11.5	1,030	7358671
	CHPF2430B6C*	G*EC960402BNA*	28,400	21,600	14.0	11.5	1,000	7366656
	CHPF2430B6C*	G*VC960603BNA*	28,400	21,600	14.0	11.5	1,000	7358673
	CHPF2430B6C*	A*VC960803BNA*	28,400	21,600	14.0	11.5	1,030	7358669
	CHPF2430B6C*+EEP		28,400	21,600	13.0	11.0	1,050	3839078
	CHPF2430B6C*+MBVC1200**-1A*		28,400	21,600	14.0	11.5	1,050	6498417
	CHPF2430B6C*+TXV	A*EC960303ANA*	28,400	21,600	14.0	11.5	975	10516238
	CHPF2430B6C*+TXV	A*EC960403ANA*	28,400	21,600	13.5	11.5	975	10516246
	CHPF2430B6C*+TXV	A*EC960403BNA*	28,400	21,600	14.0	11.7	1,000	10338577
	CHPF2430B6C*+TXV	G*VC960403BNA*	28,400	21,600	14.0	11.5	1,000	7358682
	CHPF2430B6C*+TXV	A*VC960403BNA*	28,400	21,600	14.0	11.5	1,000	7358677
	CHPF2430B6C*+TXV	G*VC960803BNA*	28,400	21,600	14.0	11.5	1,030	7358684
	CHPF2430B6C*+TXV	A*VM970803BNA*	28,400	21,600	14.0	11.5	1,030	7358681
	CHPF2430B6C*+TXV	G*VM970803BNA*	28,400	21,600	14.0	11.5	1,030	7358686
	CHPF2430B6C*+TXV	A*VC960803BNA*	28,400	21,600	14.0	11.5	1,030	7358679
	CHPF2430B6C*+TXV	A*VC960603BNA*	28,400	21,600	14.0	11.5	1,000	7358678
	CHPF2430B6C*+TXV	A*VM970603BNA*	28,400	21,600	14.0	11.5	1,000	7358680
	CHPF2430B6C*+TXV	G*EC960402BNA*	28,400	21,600	14.0	11.5	1,000	7366657
	CHPF2430B6C*+TXV	G*EC960302BNA*	28,400	21,600	14.0	11.5	1,000	7366649
	CHPF2430B6C*+TXV	A*EC960302BNA*	28,400	21,600	14.0	11.5	1,000	7366752
	CHPF2430B6C*+TXV	G*VC960603BNA*	28,400	21,600	14.0	11.5	1,000	7358683
	CHPF2430B6C*+TXV	A*EC960402BNA*	28,400	21,600	14.0	11.5	1,000	7366760
	CHPF2430B6C*+TXV	G*VM970603BNA*	28,400	21,600	14.0	11.5	1,000	7358685
	CHPF3636B6C*	A*EC960603BNA*	28,400	21,600	13.5	11.5	1,000	7366767
	CHPF3636B6C*	G*EC960803BNA*	28,400	21,600	13.5	11.5	1,000	7366672
	CHPF3636B6C*	A*EC960803BNA*	28,400	21,600	13.5	11.5	1,000	7366775
	CHPF3636B6C*	G*EC960603BNA*	28,400	21,600	13.5	11.5	1,000	7366664
	CHPF3636B6C*+TXV	A*EC960603ANA*	28,400	21,600	13.5	11.3	975	10516249
	CHPF3636B6C*+TXV	A*EC960803BNA*	28,400	21,600	14.0	11.5	1,000	7366776
	CHPF3636B6C*+TXV	A*EC960603BNA*	28,400	21,600	14.0	11.5	1,000	7366768
	CHPF3636B6C*+TXV	G*EC960603BNA*	28,400	21,600	14.0	11.5	1,000	7366665
	CHPF3636B6C*+TXV	G*EC960803BNA*	28,400	21,600	14.0	11.5	1,000	7366673
	CHPF3642C6C*	G*VM970804CNA*	28,400	21,600	14.0	11.5	1,000	7358690
	CHPF3642C6C*	A*VM970804CNA*	28,400	21,600	14.0	11.5	1,000	7358688
	CHPF3642C6C*	A*VC960804CNA*	28,400	21,600	14.0	11.5	1,000	7358687
	CHPF3642C6C*	G*VC960804CNA*	28,400	21,600	14.0	11.5	1,000	7358689
	CHPF3642C6C*+TXV	A*VM970804CNA*	28,400	21,600	14.0	11.5	1,000	7358692
	CHPF3642C6C*+TXV	G*VM970804CNA*	28,400	21,600	14.0	11.5	1,000	7358694
	CHPF3642C6C*+TXV	G*VC960804CNA*	28,400	21,600	14.0	11.5	1,000	7358693
	CHPF3642C6C*+TXV	A*VC960804CNA*	28,400	21,600	14.0	11.5	1,000	7358691
	CSCF3036N6D*	G*VC960403BNA*	28,400	21,600	14.0	11.5	1,000	7358702

See Notes on Page 48.

Outdoor Unit	Indoor Units		Cooling Ratings				CFM	AHRI #
	Coils/Air Handlers	Furnaces	Total[1]	Sens.[1]	SEER[2]	EER[3]		
ASX13 0301C* (Contd.)	CSCF3036N6D*	G*VC960803BNA*	28,400	21,600	14.0	11.5	1,030	7358704
	CSCF3036N6D*	A*VM970804CNA*	28,200	21,400	14.0	11.5	1,000	7358701
	CSCF3036N6D*	A*VC960803BNA*	28,400	21,600	14.0	11.5	1,030	7358697
	CSCF3036N6D*	A*VM970803BNA*	28,400	21,600	14.0	11.5	1,030	7358700
	CSCF3036N6D*	G*VM970804CNA*	28,200	21,400	14.0	11.5	1,000	7358708
	CSCF3036N6D*	A*VC960804CNA*	28,200	21,400	14.0	11.5	1,000	7358698
	CSCF3036N6D*	A*VM970603BNA*	28,400	21,600	14.0	11.3	1,000	7358699
	CSCF3036N6D*	G*VM970803BNA*	28,400	21,600	14.0	11.5	1,030	7358707
	CSCF3036N6D*	A*VC960403BNA*	28,400	21,600	14.0	11.5	1,000	7358695
	CSCF3036N6D*	G*VC960804CNA*	28,200	21,400	14.0	11.5	1,000	7358705
	CSCF3036N6D*	G*VM970603BNA*	28,400	21,600	14.0	11.3	1,000	7358706
	CSCF3036N6D*	A*VC960603BNA*	28,400	21,600	14.0	11.3	1,000	7358696
	CSCF3036N6D*	G*VC960603BNA*	28,400	21,600	14.0	11.3	1,000	7358703
	CSCF3036N6D*+EEP		28,400	21,600	13.0	11.0	1,000	4767336
	CSCF3036N6D*+TXV	A*VM970804CNA*	28,200	21,400	14.0	11.5	1,000	7358715
	CSCF3036N6D*+TXV	A*VC960804CNA*	28,200	21,400	14.0	11.5	1,000	7358712
	CSCF3036N6D*+TXV	A*VM970803BNA*	28,400	21,600	14.0	11.5	1,030	7358714
	CSCF3036N6D*+TXV	G*VC960803BNA*	28,400	21,600	14.0	11.5	1,030	7358718
	CSCF3036N6D*+TXV	A*VM970603BNA*	28,400	21,600	14.0	11.3	1,000	7358713
	CSCF3036N6D*+TXV	A*VC960603BNA*	28,400	21,600	14.0	11.3	1,000	7358710
	CSCF3036N6D*+TXV	A*VC960403BNA*	28,400	21,600	14.0	11.5	1,000	7358709
	CSCF3036N6D*+TXV	G*VM970804CNA*	28,200	21,400	14.0	11.5	1,000	7358722
	CSCF3036N6D*+TXV	G*VC960603BNA*	28,400	21,600	14.0	11.3	1,000	7358717
	CSCF3036N6D*+TXV	G*VC960804CNA*	28,200	21,400	14.0	11.5	1,000	7358719
	CSCF3036N6D*+TXV	G*VM970603BNA*	28,400	21,600	14.0	11.3	1,000	7358720
	CSCF3036N6D*+TXV	A*VC960803BNA*	28,400	21,600	14.0	11.5	1,030	7358711
	CSCF3036N6D*+TXV	G*VC960403BNA*	28,400	21,600	14.0	11.5	1,000	7358716
	CSCF3036N6D*+TXV	G*VM970803BNA*	28,400	21,600	14.0	11.5	1,030	7358721
ASX13 0361D*	ARUF36C14B*+TXV		34,000	26,400	13.0	11.0	1,165	5696792
	ARUF37C14A*		34,000	26,400	13.0	11.0	1,050	7988983
	ARUF42C14A*+TXV		34,200	26,600	13.0	11.0	1,150	5696794
	ASPT36C14A*		34,000	26,400	13.8	11.8	1,210	5722590
	ASPT37C14A*		34,200	26,600	14.0	12.0	1,120	8245605
	ASPT39C14B*		34,400	26,800	13.5	11.5	1,220	201844935
	AVPTC36C14A*		34,000	26,400	13.8	11.8	1,215	5924465
	AVPTC37B14A*		34,600	27,000	13.5	11.5	1,080	8996343
	AVPTC37C14A*		35,000	27,200	14.0	12.0	1,130	8996344
	AVPTC37D14A*		35,400	27,600	14.0	12.0	1,145	8996345
	AVPTC39C14A*		34,400	26,800	13.5	11.5	1,175	10221065
	AVPTC42D14A*		34,600	27,000	14.0	12.0	1,225	5924466
	AVPTC48C14A*		34,000	26,400	14.0	12.0	1,100	7080454
	AWUF36XX16B*		33,400	26,000	13.0	11.0	1,150	5696797
	AWUF37XX16B*		33,600	26,200	13.0	11.0	1,150	5696798
	CA*F3137*6A*	A*EH800603B*A*	34,000	26,400	14.0	11.5	1,100	7489670
	CA*F3137*6A*	A*VM970603BNA*	34,000	26,400	13.5	11.0	1,055	7489675
	CA*F3137*6A*	A*EC960803BNA*	34,000	26,400	13.5	11.0	1,090	7489669
	CA*F3137*6A*	G*VC960803BNA*	34,000	26,400	13.5	11.0	1,100	7489684
	CA*F3137*6A*	G*EC960803BNA*	34,000	26,400	13.5	11.0	1,090	7489680
	CA*F3137*6A*	A*VM970803BNA*	34,000	26,400	13.5	11.0	1,100	7489676
	CA*F3137*6A*	G*VM970603BNA*	34,000	26,400	13.5	11.0	1,055	7489685
	CA*F3137*6A*	A*VC960803BNA*	34,000	26,400	13.5	11.0	1,100	7489674
	CA*F3137*6A*	G*EC960603BNA*	34,000	26,400	13.5	11.0	1,090	7489679
	CA*F3137*6A*	ADVC80603B*B*	34,000	26,400	13.5	11.0	1,075	7489677

See Notes on Page 48.

Outdoor Unit	Indoor Units		Cooling Ratings				CFM	AHRI #
	Coils/Air Handlers	Furnaces	Total[1]	Sens.[1]	SEER[2]	EER[3]		
ASX13 0361D*	CA*F3137*6A*	A*VC80604B*B*	34,000	26,400	14.0	11.5	1,095	7489671
	CA*F3137*6A*	G*VC960403BNA*	34,000	26,400	13.5	11.0	1,050	7489682
	CA*F3137*6A*	A*VC960603BNA*	34,000	26,400	13.5	11.0	1,055	7489673
	CA*F3137*6A*	G*E80603B*B*	34,000	26,400	14.0	11.5	1,100	7489678
	CA*F3137*6A*	G*VM970803BNA*	34,000	26,400	13.5	11.0	1,100	7489686
	CA*F3137*6A*	A*VC960403BNA*	34,000	26,400	13.5	11.0	1,050	7489672
	CA*F3137*6A*	A*EC960603BNA*	34,000	26,400	13.5	11.0	1,090	7489668
	CA*F3137*6A*	G*VC80604B*B*	34,000	26,400	14.0	11.5	1,095	7489681
	CA*F3137*6A*	G*VC960603BNA*	34,000	26,400	13.5	11.0	1,055	7489683
	CA*F3137*6A*+EEP		34,000	26,400	13.0	11.0	1,200	7489645
	CA*F3137*6A*+EEP+TXV		34,000	26,400	13.5	11.0	1,200	7489646
	CA*F3137*6A*+MBVC1200**-1A*		34,000	26,400	14.0	11.5	1,050	7489647
	CA*F3137*6A*+MBVC1200**-1A*+TXV		34,000	26,400	14.0	11.5	1,050	7489648
	CA*F3137*6A*+TXV	G*VM970803BNA*	34,000	26,400	14.0	11.5	1,100	7489667
	CA*F3137*6A*+TXV	G*VM970603BNA*	34,000	26,400	14.0	11.5	1,055	7489666
	CA*F3137*6A*+TXV	A*EC960603BNA*	34,000	26,400	13.5	11.0	1,090	7489649
	CA*F3137*6A*+TXV	G*VC960403BNA*	34,000	26,400	14.0	11.5	1,050	7489663
	CA*F3137*6A*+TXV	A*EC960803BNA*	34,000	26,400	13.5	11.0	1,090	7489650
	CA*F3137*6A*+TXV	A*VC960803BNA*	34,000	26,400	14.0	11.5	1,100	7489655
	CA*F3137*6A*+TXV	G*EC960603BNA*	34,000	26,400	13.5	11.0	1,090	7489660
	CA*F3137*6A*+TXV	G*VC960803BNA*	34,000	26,400	14.0	11.5	1,100	7489665
	CA*F3137*6A*+TXV	ADVC80603B*B*	34,000	26,400	14.0	11.5	1,075	7489658
	CA*F3137*6A*+TXV	G*VC960603BNA*	34,000	26,400	14.0	11.5	1,055	7489664
	CA*F3137*6A*+TXV	G*VC80604B*B*	34,000	26,400	14.0	11.5	1,095	7489662
	CA*F3137*6A*+TXV	A*EH800603B*A*	34,000	26,400	14.0	11.5	1,100	7489651
	CA*F3137*6A*+TXV	A*VC960603BNA*	34,000	26,400	14.0	11.5	1,055	7489654
	CA*F3137*6A*+TXV	A*VC80604B*B*	34,000	26,400	14.0	11.5	1,095	7489652
	CA*F3137*6A*+TXV	A*VM970803BNA*	34,000	26,400	14.0	11.5	1,100	7489657
	CA*F3137*6A*+TXV	A*VM970603BNA*	34,000	26,400	14.0	11.5	1,055	7489656
	CA*F3137*6A*+TXV	G*EC960803BNA*	34,000	26,400	13.5	11.0	1,090	7489661
	CA*F3137*6A*+TXV	A*VC960403BNA*	34,000	26,400	14.0	11.5	1,050	7489653
	CA*F3137*6A*+TXV	G*E80603B*B*	34,000	26,400	14.0	11.5	1,100	7489659
	CA*F3636*6D*+EEP		33,600	26,200	13.0	11.0	1,200	5696778
	CA*F3642*6D*+EEP		33,600	26,200	13.0	11.0	1,200	5696780
	CA*F3642*6D*+MBVC1600**-1A*		34,000	26,400	14.0	11.5	1,200	5696847
	CA*F3743*6D*	A*VM971005CNA*	34,000	26,400	13.5	11.3	1,175	7358727
	CA*F3743*6D*	G*EC961004CNA*	33,600	26,200	13.5	11.5	1,100	7366678
	CA*F3743*6D*	G*VM970804CNA*	34,000	26,400	13.0	11.0	1,115	7358732
	CA*F3743*6D*	G*VC961205DNA*	34,000	26,400	13.5	11.3	1,150	7358731
	CA*F3743*6D*	A*VM971205DNA*	34,000	26,400	13.5	11.3	1,150	7358728
	CA*F3743*6D*	A*VC961005CNA*	34,000	26,400	13.5	11.3	1,175	7358724
	CA*F3743*6D*	A*EC961004CNA*	33,600	26,200	13.5	11.5	1,100	7366781
	CA*F3743*6D*	G*VM971205DNA*	34,000	26,400	13.5	11.3	1,150	7358734
	CA*F3743*6D*	G*VC960804CNA*	34,000	26,400	13.0	11.0	1,115	7358729
	CA*F3743*6D*	A*VC961205DNA*	34,000	26,400	13.5	11.3	1,150	7358725
	CA*F3743*6D*	A*VM970804CNA*	34,000	26,400	13.0	11.0	1,115	7358726
	CA*F3743*6D*	A*VC960804CNA*	34,000	26,400	13.0	11.0	1,115	7358723
	CA*F3743*6D*	G*VM971005CNA*	34,000	26,400	13.5	11.3	1,175	7358733
	CA*F3743*6D*	G*VC961005CNA*	34,000	26,400	13.5	11.3	1,175	7358730
	CA*F3743*6D*+EEP		34,200	26,600	13.0	11.0	1,200	5696781
	CA*F3743*6D*+EEP+TXV		34,200	26,600	13.5	11.0	1,200	5696782
	CA*F3743*6D*+MBVC1600**-1A*		34,000	26,400	14.0	11.5	1,210	5696848
	CA*F3743*6D*+TXV	A*VM971005CNA*	34,000	26,400	13.5	11.3	1,175	7358739

See Notes on Page 48.

Outdoor Unit	Indoor Units		Cooling Ratings				CFM	AHRI #
	Coils/Air Handlers	Furnaces	Total[1]	Sens.[1]	SEER[2]	EER[3]		
ASX13 0361D* (Contd.)	CA*F3743*6D*+TXV	A*VM970804CNA*	34,000	26,400	13.5	11.3	1,115	7358738
	CA*F3743*6D*+TXV	G*EC960603BNA*	33,600	26,200	13.5	11.0	1,175	7366674
	CA*F3743*6D*+TXV	G*VC961005CNA*	34,000	26,400	13.5	11.3	1,175	7358742
	CA*F3743*6D*+TXV	A*VM971205DNA*	34,000	26,400	13.5	11.3	1,150	7358740
	CA*F3743*6D*+TXV	G*VC960804CNA*	34,000	26,400	13.5	11.3	1,115	7358741
	CA*F3743*6D*+TXV	A*EC960803BNA*	33,400	26,000	13.5	11.0	1,075	7366779
	CA*F3743*6D*+TXV	A*VC960804CNA*	34,000	26,400	13.5	11.3	1,115	7358735
	CA*F3743*6D*+TXV	A*VC961205DNA*	34,000	26,400	13.5	11.3	1,150	7358737
	CA*F3743*6D*+TXV	G*EC961004CNA*	33,600	26,200	14.0	11.5	1,100	7366679
	CA*F3743*6D*+TXV	G*EC960803BNA*	33,400	26,000	13.5	11.0	1,075	7366676
	CA*F3743*6D*+TXV	A*VC961005CNA*	34,000	26,400	13.5	11.3	1,175	7358736
	CA*F3743*6D*+TXV	A*EC961004CNA*	33,600	26,200	14.0	11.5	1,100	7366782
	CA*F3743*6D*+TXV	G*VM971005CNA*	34,000	26,400	13.5	11.3	1,175	7358745
	CA*F3743*6D*+TXV	G*VM970804CNA*	34,000	26,400	13.5	11.3	1,115	7358744
	CA*F3743*6D*+TXV	A*EC960603BNA*	33,600	26,200	13.5	11.0	1,175	7366777
	CA*F3743*6D*+TXV	G*VM971205DNA*	34,000	26,400	13.5	11.3	1,150	7358746
	CA*F3743*6D*+TXV	G*VC961205DNA*	34,000	26,400	13.5	11.3	1,150	7358743
	CAPT3743*4A*	A*EH800805C*A*	34,000	26,400	13.5	11.5	1,210	6945826
	CAPT3743*4A*	A*EH800603B*A*	34,000	26,400	13.0	11.0	1,150	6945825
	CAPT3743*4A*	G*VM971005CNA*	34,000	26,400	13.0	11.0	1,175	7358757
	CAPT3743*4A*	G*VM971205DNA*	34,000	26,400	13.5	11.3	1,150	7358758
	CAPT3743*4A*	A*VC81005C*B*	34,000	26,400	13.5	11.5	1,210	6494079
	CAPT3743*4A*	A*VC80604B*B*	34,000	26,400	13.5	11.5	1,220	6494077
	CAPT3743*4A*	A*VC961005CNA*	34,000	26,400	13.0	11.0	1,175	7358748
	CAPT3743*4A*	G*VC960804CNA*	34,000	26,400	13.0	11.0	1,115	7358753
	CAPT3743*4A*	A*VC961205DNA*	34,000	26,400	13.5	11.3	1,150	7358749
	CAPT3743*4A*	G*E80603B*B*	34,000	26,400	13.0	11.0	1,150	6494095
	CAPT3743*4A*	G*VM970804CNA*	34,000	26,400	13.0	11.0	1,115	7358756
	CAPT3743*4A*	ADVC81005C*B*	34,000	26,400	13.5	11.5	1,235	6494094
	CAPT3743*4A*	A*VM971005CNA*	34,000	26,400	13.0	11.0	1,175	7358751
	CAPT3743*4A*	ADVC80805C*B*	34,000	26,400	13.5	11.5	1,190	6494093
	CAPT3743*4A*	G*VC80805C*B*	34,000	26,400	13.5	11.5	1,190	6494104
	CAPT3743*4A*	A*VC80805C*B*	34,000	26,400	13.5	11.5	1,190	6494078
	CAPT3743*4A*	A*EC961004CNA*	33,600	26,200	13.5	11.3	1,100	7366783
	CAPT3743*4A*	G*VC80604B*B*	34,000	26,400	13.5	11.5	1,220	6494103
	CAPT3743*4A*	G*E81005C*B*	34,000	26,400	13.5	11.5	1,230	6494097
	CAPT3743*4A*	G*VC961005CNA*	34,000	26,400	13.0	11.0	1,175	7358754
	CAPT3743*4A*	G*VC81005C*B*	34,000	26,400	13.5	11.5	1,210	6494105
	CAPT3743*4A*	A*VM970804CNA*	34,000	26,400	13.0	11.0	1,115	7358750
	CAPT3743*4A*	G*VC961205DNA*	34,000	26,400	13.5	11.3	1,150	7358755
	CAPT3743*4A*	G*EC961004CNA*	33,600	26,200	13.5	11.3	1,100	7366680
	CAPT3743*4A*	G*E80805C*B*	34,000	26,400	13.5	11.5	1,210	6494096
	CAPT3743*4A*	A*VM971205DNA*	34,000	26,400	13.5	11.3	1,150	7358752
	CAPT3743*4A*	ADVC80603B*B*	34,000	26,400	13.5	11.5	1,165	6494092
	CAPT3743*4A*	A*EH801005C*A*	34,000	26,400	13.5	11.5	1,230	6945827
	CAPT3743*4A*	A*VC960804CNA*	34,000	26,400	13.0	11.0	1,115	7358747
	CAPT3743*4A*+EEP		34,000	26,400	13.0	11.0	1,200	5696783
	CAPT3743*4A*+MBVC1200**-1A*		34,000	26,400	13.0	11.5	1,200	6494102
	CAPT3743*4A*+MBVC1600**-1A*		34,000	26,400	14.0	11.5	1,205	5696849
	CAPT3743*4A*+MBVC2000**-1A*		34,000	26,400	14.0	11.5	1,205	5696851
	CHPF3636B6C*+EEP		33,000	26,400	13.0	11.0	1,000	5696784
	CHPF3642C6C*	A*VC961005CNA*	34,000	26,400	13.5	11.3	1,175	7358760
	CHPF3642C6C*	G*VM970804CNA*	33,800	26,400	13.0	11.0	1,115	7358765

See Notes on Page 48.

Outdoor Unit	Indoor Units		Cooling Ratings				CFM	AHRI #
	Coils/Air Handlers	Furnaces	Total[1]	Sens.[1]	SEER[2]	EER[3]		
ASX13 0361D* (Contd.)	CHPF3642C6C*	G*VC961005CNA*	34,000	26,400	13.5	11.3	1,175	7358764
	CHPF3642C6C*	A*VC960804CNA*	33,800	26,400	13.0	11.0	1,115	7358759
	CHPF3642C6C*	G*VM971005CNA*	34,000	26,400	13.5	11.3	1,175	7358766
	CHPF3642C6C*	G*VC960804CNA*	33,800	26,400	13.0	11.0	1,115	7358763
	CHPF3642C6C*	A*VM970804CNA*	33,800	26,400	13.0	11.0	1,115	7358761
	CHPF3642C6C*	A*VM971005CNA*	34,000	26,400	13.5	11.3	1,175	7358762
	CHPF3642C6C*+EEP		33,000	26,400	13.0	11.0	1,000	5696785
	CHPF3642C6C*+MBVC1600**-1A*		34,000	26,400	14.0	11.5	1,210	5696850
	CHPF3642C6C*+TXV	A*VM971005CNA*	34,000	26,400	13.5	11.3	1,175	7358770
	CHPF3642C6C*+TXV	G*VM970804CNA*	33,800	26,400	13.5	11.3	1,115	7358773
	CHPF3642C6C*+TXV	A*VC960804CNA*	33,800	26,400	13.5	11.3	1,115	7358767
	CHPF3642C6C*+TXV	A*VM970804CNA*	33,800	26,400	13.5	11.3	1,115	7358769
	CHPF3642C6C*+TXV	G*VC961005CNA*	34,000	26,400	13.5	11.3	1,175	7358772
	CHPF3642C6C*+TXV	G*VM971005CNA*	34,000	26,400	13.5	11.3	1,175	7358774
	CHPF3642C6C*+TXV	A*VC961005CNA*	34,000	26,400	13.5	11.3	1,175	7358768
	CHPF3642C6C*+TXV	G*VC960804CNA*	33,800	26,400	13.5	11.3	1,115	7358771
	CHPF3642D6C*	G*VC961205DNA*	34,000	26,400	13.5	11.3	1,150	7358777
	CHPF3642D6C*	A*VC961205DNA*	34,000	26,400	13.5	11.3	1,150	7358775
	CHPF3642D6C*	G*VM971205DNA*	34,000	26,400	13.5	11.3	1,150	7358778
	CHPF3642D6C*	A*VM971205DNA*	34,000	26,400	13.5	11.3	1,150	7358776
	CHPF3642D6C*+EEP		34,000	26,400	13.0	11.0	1,200	5696786
	CHPF3642D6C*+TXV	A*VC961205DNA*	34,000	26,400	13.5	11.3	1,150	7358779
	CHPF3642D6C*+TXV	G*VC961205DNA*	34,000	26,400	13.5	11.3	1,150	7358781
	CHPF3642D6C*+TXV	G*VM971205DNA*	34,000	26,400	13.5	11.3	1,150	7358782
	CHPF3642D6C*+TXV	A*VM971205DNA*	34,000	26,400	13.5	11.3	1,150	7358780
	CHPF3743C6B*	A*EC961004CNA*	33,600	26,200	13.5	11.3	1,100	7366784
	CHPF3743C6B*	G*EC961004CNA*	33,600	26,200	13.5	11.3	1,100	7366681
	CHPF3743C6B*+TXV	G*EC960603BNA*	33,600	26,200	13.5	11.0	1,175	7366675
	CHPF3743C6B*+TXV	A*EC961004CNA*	33,600	26,200	14.0	11.5	1,100	7366785
	CHPF3743C6B*+TXV	A*EC960603BNA*	33,600	26,200	13.5	11.0	1,175	7366778
	CHPF3743C6B*+TXV	G*EC960803BNA*	33,400	26,000	13.5	11.0	1,075	7366677
	CHPF3743C6B*+TXV	G*EC961004CNA*	33,600	26,200	14.0	11.5	1,100	7366682
	CHPF3743C6B*+TXV	A*EC960803BNA*	33,400	26,000	13.5	11.0	1,075	7366780
	CSCF3036N6D*+EEP		34,000	26,400	13.0	11.0	1,200	6752558
	CSCF3642N6D*	A*VC960804CNA*	33,600	26,200	13.0	11.0	1,115	7358783
	CSCF3642N6D*	G*VM971205DNA*	33,600	26,200	13.5	11.3	1,150	7358794
	CSCF3642N6D*	A*VC961005CNA*	33,800	26,400	13.5	11.3	1,175	7358784
	CSCF3642N6D*	G*VC961205DNA*	33,600	26,200	13.5	11.3	1,150	7358791
	CSCF3642N6D*	A*VM971005CNA*	33,800	26,400	13.5	11.3	1,175	7358787
	CSCF3642N6D*	A*VM971205DNA*	33,600	26,200	13.5	11.3	1,150	7358788
	CSCF3642N6D*	A*VM970804CNA*	33,600	26,200	13.0	11.0	1,115	7358786
	CSCF3642N6D*	A*VC961205DNA*	33,600	26,200	13.5	11.3	1,150	7358785
	CSCF3642N6D*	G*VC960804CNA*	33,600	26,200	13.0	11.0	1,115	7358789
	CSCF3642N6D*	G*VM970804CNA*	33,600	26,200	13.0	11.0	1,115	7358792
	CSCF3642N6D*	G*VM971005CNA*	33,800	26,400	13.5	11.3	1,175	7358793
	CSCF3642N6D*	G*VC961005CNA*	33,800	26,400	13.5	11.3	1,175	7358790
	CSCF3642N6D*+EEP		34,600	27,000	13.0	11.0	1,200	6752559
	CSCF3642N6D*+TXV	A*VM971005CNA*	33,800	26,400	13.5	11.3	1,175	7358799
	CSCF3642N6D*+TXV	A*VC960804CNA*	33,600	26,200	13.0	11.0	1,115	7358795
	CSCF3642N6D*+TXV	G*VM970804CNA*	33,600	26,200	13.0	11.0	1,115	7358804
	CSCF3642N6D*+TXV	G*VC961005CNA*	33,800	26,400	13.5	11.3	1,175	7358802
	CSCF3642N6D*+TXV	A*VC961005CNA*	33,800	26,400	13.5	11.3	1,175	7358796
	CSCF3642N6D*+TXV	G*VM971205DNA*	33,600	26,200	13.5	11.3	1,150	7358806

Outdoor Unit	Indoor Units		Cooling Ratings				CFM	AHRI #
	Coils/Air Handlers	Furnaces	Total[1]	Sens.[1]	SEER[2]	EER[3]		
ASX13 0361D* (Contd.)	CSCF3642N6D*+TXV	A*VC961205DNA*	33,600	26,200	13.5	11.3	1,150	7358797
	CSCF3642N6D*+TXV	G*VM971005CNA*	33,800	26,400	13.5	11.3	1,175	7358805
	CSCF3642N6D*+TXV	G*VC960804CNA*	33,600	26,200	13.0	11.0	1,115	7358801
	CSCF3642N6D*+TXV	G*VC961205DNA*	33,600	26,200	13.5	11.3	1,150	7358803
	CSCF3642N6D*+TXV	A*VM970804CNA*	33,600	26,200	13.0	11.0	1,115	7358798
	CSCF3642N6D*+TXV	A*VM971205DNA*	33,600	26,200	13.5	11.3	1,150	7358800
ASX13 0421C*	ARUF42C14A*+TXV		39,500	30,200	13.0	11.0	1,280	5501065
	ARUF43C14A*		40,500	31,000	13.0	11.0	1,345	7988984
	ARUF43D14A*		40,500	31,000	13.0	11.0	1,270	8171741
	ASPT47D14A*		40,000	30,600	14.0	12.0	1,200	8245607
	ASPT49C14A*		39,500	30,200	13.5	11.5	1,355	10221025
	ASPT49D14A*		40,500	31,000	14.0	12.0	1,290	8245609
	AVPTC42D14A*		40,500	31,000	14.0	12.0	1,495	5924372
	AVPTC48C14A*		39,500	30,200	13.5	11.5	1,300	7080466
	AVPTC49C14A*		39,500	30,200	13.5	11.5	1,285	10221066
	AVPTC49D14A*		41,000	31,400	14.0	12.0	1,320	8996348
	AVPTC59C14A*		40,000	30,600	14.0	12.0	1,290	8996346
	AVPTC59D14A*		40,500	31,000	14.0	12.0	1,365	8996347
	CA*F3642*6D*	A*EH800805C*A*	40,000	30,600	13.0	11.3	1,350	6945833
	CA*F3642*6D*	G*E80805C*B*	40,000	30,600	13.0	11.3	1,350	6498419
	CA*F3642*6D*+EEP		40,000	30,600	13.0	11.0	1,400	4919371
	CA*F3642*6D*+EEP+TXV		40,000	30,600	13.0	11.0	1,400	5582225
	CA*F3743*6D*	G*VM971005CNA*	40,500	31,000	14.0	11.5	1,300	7358817
	CA*F3743*6D*	G*E80805C*B*	40,000	30,600	13.0	11.3	1,350	6498420
	CA*F3743*6D*	G*VM970804CNA*	40,500	31,000	14.0	11.5	1,300	7358816
	CA*F3743*6D*	A*VM971205DNA*	40,000	30,600	14.0	11.5	1,250	7358812
	CA*F3743*6D*	A*VM970804CNA*	40,500	31,000	14.0	11.5	1,300	7358810
	CA*F3743*6D*	G*VC961205DNA*	40,000	30,600	14.0	11.5	1,250	7358815
	CA*F3743*6D*	A*VC961205DNA*	40,000	30,600	14.0	11.5	1,250	7358809
	CA*F3743*6D*	G*VM971205DNA*	40,000	30,600	14.0	11.5	1,250	7358818
	CA*F3743*6D*	G*VC960804CNA*	40,500	31,000	14.0	11.5	1,300	7358813
	CA*F3743*6D*	G*VC961005CNA*	40,500	31,000	14.0	11.5	1,300	7358814
	CA*F3743*6D*	A*VC960804CNA*	40,500	31,000	14.0	11.5	1,300	7358807
	CA*F3743*6D*	A*VC961005CNA*	40,500	31,000	14.0	11.5	1,300	7358808
	CA*F3743*6D*	A*VM971005CNA*	40,500	31,000	14.0	11.5	1,300	7358811
	CA*F3743*6D*	A*EH800805C*A*	40,000	30,600	13.0	11.3	1,350	6945834
	CA*F3743*6D*+EEP		40,000	30,600	13.0	11.0	1,400	6498421
	CA*F3743*6D*+TXV	A*VM970804CNA*	40,500	31,000	14.0	11.5	1,300	7358822
	CA*F3743*6D*+TXV	G*VC961005CNA*	40,500	31,000	14.0	11.5	1,300	7358826
	CA*F3743*6D*+TXV	A*VC961005CNA*	40,500	31,000	14.0	11.5	1,300	7358820
	CA*F3743*6D*+TXV	A*VM971205DNA*	40,000	30,600	14.0	11.5	1,250	7358824
	CA*F3743*6D*+TXV	G*VM970804CNA*	40,500	31,000	14.0	11.5	1,300	7358828
	CA*F3743*6D*+TXV	A*VC961205DNA*	40,000	30,600	14.0	11.5	1,250	7358821
	CA*F3743*6D*+TXV	A*VC960804CNA*	40,500	31,000	14.0	11.5	1,300	7358819
	CA*F3743*6D*+TXV	G*VC960804CNA*	40,500	31,000	14.0	11.5	1,300	7358825
	CA*F3743*6D*+TXV	G*VM971205DNA*	40,000	30,600	14.0	11.5	1,250	7358830
	CA*F3743*6D*+TXV	A*VM971005CNA*	40,500	31,000	14.0	11.5	1,300	7358823
	CA*F3743*6D*+TXV	G*VM971005CNA*	40,500	31,000	14.0	11.5	1,300	7358829
	CA*F3743*6D*+TXV	G*VC961205DNA*	40,000	30,600	14.0	11.5	1,250	7358827
	CA*F4860*6D*	G*VC960804CNA*	41,000	31,400	14.0	11.5	1,300	7358837
	CA*F4860*6D*	A*VM970804CNA*	41,000	31,400	14.0	11.5	1,300	7358834
	CA*F4860*6D*	G*E80805C*B*	41,000	31,400	13.5	11.5	1,510	6498422
	CA*F4860*6D*	A*EC961004CNA*	39,500	30,200	14.0	11.5	1,275	7366786

Outdoor Unit	Indoor Units		Cooling Ratings				CFM	AHRI #
	Coils/Air Handlers	Furnaces	Total[1]	Sens.[1]	SEER[2]	EER[3]		
ASX13 0421C* (Contd.)	CA*F4860*6D*	G*VC961005CNA*	41,000	31,400	14.0	11.5	1,300	7358838
	CA*F4860*6D*	A*VM971005CNA*	41,000	31,400	14.0	11.5	1,300	7358835
	CA*F4860*6D*	G*EC961004CNA*	39,500	30,200	14.0	11.5	1,275	7366683
	CA*F4860*6D*	G*VM971005CNA*	41,000	31,400	14.0	11.5	1,300	7358841
	CA*F4860*6D*	A*EH800805C*A*	41,000	31,400	13.5	11.5	1,510	6945835
	CA*F4860*6D*	G*VM970804CNA*	41,000	31,400	14.0	11.5	1,300	7358840
	CA*F4860*6D*	G*EC961205DNA*	40,000	30,600	13.5	11.3	1,400	7366688
	CA*F4860*6D*	A*VC961005CNA*	41,000	31,400	14.0	11.5	1,300	7358832
	CA*F4860*6D*	A*VC961205DNA*	40,500	31,000	14.0	11.5	1,250	7358833
	CA*F4860*6D*	G*VM971205DNA*	40,500	31,000	14.0	11.5	1,250	7358842
	CA*F4860*6D*	A*VM971205DNA*	40,500	31,000	14.0	11.5	1,250	7358836
	CA*F4860*6D*	A*EC961205DNA*	40,000	30,600	13.5	11.3	1,400	7366791
	CA*F4860*6D*	G*VC961205DNA*	40,500	31,000	14.0	11.5	1,250	7358839
	CA*F4860*6D*	A*VC960804CNA*	41,000	31,400	14.0	11.5	1,300	7358831
	CA*F4860*6D*+EEP		41,000	31,400	13.0	11.0	1,400	6498432
	CA*F4860*6D*+MBVC1600**-1A*		41,000	31,400	14.0	11.5	1,400	3880907
	CA*F4860*6D*+TXV	G*VC960804CNA*	41,000	31,400	14.0	11.5	1,300	7358849
	CA*F4860*6D*+TXV	A*EC961205DNA*	40,000	30,600	14.0	11.5	1,400	7366792
	CA*F4860*6D*+TXV	A*VM971005CNA*	41,000	31,400	14.0	11.5	1,300	7358847
	CA*F4860*6D*+TXV	G*VC961205DNA*	40,500	31,000	14.0	11.5	1,250	7358851
	CA*F4860*6D*+TXV	A*VC961005CNA*	41,000	31,400	14.0	11.5	1,300	7358844
	CA*F4860*6D*+TXV	G*VM971005CNA*	41,000	31,400	14.0	11.5	1,300	7358853
	CA*F4860*6D*+TXV	G*VM970804CNA*	41,000	31,400	14.0	11.5	1,300	7358852
	CA*F4860*6D*+TXV	G*VC961005CNA*	41,000	31,400	14.0	11.5	1,300	7358850
	CA*F4860*6D*+TXV	A*VM971205DNA*	40,500	31,000	14.0	11.5	1,250	7358848
	CA*F4860*6D*+TXV	A*VC961205DNA*	40,500	31,000	14.0	11.5	1,250	7358845
	CA*F4860*6D*+TXV	A*VM970804CNA*	41,000	31,400	14.0	11.5	1,300	7358846
	CA*F4860*6D*+TXV	A*VC960804CNA*	41,000	31,400	14.0	11.5	1,300	7358843
	CA*F4860*6D*+TXV	G*EC961205DNA*	40,000	30,600	14.0	11.5	1,400	7366689
	CA*F4860*6D*+TXV	G*EC961004CNA*	39,500	30,200	14.0	11.5	1,275	7366684
	CA*F4860*6D*+TXV	A*EC961004CNA*	39,500	30,200	14.0	11.5	1,275	7366787
	CA*F4860*6D*+TXV	G*VM971205DNA*	40,500	31,000	14.0	11.5	1,250	7358854
	CA*F4961*6D*+EEP		41,000	31,400	13.0	11.0	1,400	6498433
	CAPT4961*4A*	G*EC961004CNA*	39,500	30,200	14.0	11.5	1,275	7366685
	CAPT4961*4A*	G*VM970804CNA*	41,000	31,400	14.0	11.5	1,300	7358864
	CAPT4961*4A*	A*EC961004CNA*	39,500	30,200	14.0	11.5	1,275	7366788
	CAPT4961*4A*	A*VM971005CNA*	41,000	31,400	14.0	11.5	1,300	7358859
	CAPT4961*4A*	A*VM971205DNA*	40,500	31,000	14.0	11.5	1,250	7358860
	CAPT4961*4A*	G*VM971205DNA*	40,500	31,000	14.0	11.5	1,250	7358866
	CAPT4961*4A*	A*VC80604B*B*	41,000	31,400	14.0	12.0	1,410	6950309
	CAPT4961*4A*	G*VC960804CNA*	41,000	31,400	14.0	11.5	1,300	7358861
	CAPT4961*4A*	A*VC80805C*B*	41,000	31,400	14.0	12.0	1,395	6950323
	CAPT4961*4A*	G*E81005C*B*	41,000	31,400	14.0	12.0	1,300	6950298
	CAPT4961*4A*	G*VC961205DNA*	40,500	31,000	14.0	11.5	1,250	7358863
	CAPT4961*4A*	A*VM970804CNA*	41,000	31,400	14.0	11.5	1,300	7358858
	CAPT4961*4A*	ADVC81005C*B*	41,000	31,400	14.0	12.0	1,405	6950613
	CAPT4961*4A*	A*EC961205DNA*	40,500	31,000	14.0	11.5	1,400	7366793
	CAPT4961*4A*	G*EC961205DNA*	40,500	31,000	14.0	11.5	1,400	7366690
	CAPT4961*4A*	ADVC80805C*B*	41,000	31,400	14.0	12.0	1,380	6950604
	CAPT4961*4A*	G*E80805C*B*	41,000	31,400	14.0	12.0	1,350	6950285
	CAPT4961*4A*	A*VC960804CNA*	41,000	31,400	14.0	11.5	1,300	7358855
	CAPT4961*4A*	A*VC961205DNA*	40,500	31,000	14.0	11.5	1,250	7358857
	CAPT4961*4A*	G*E80603B*B*	41,000	31,400	13.5	11.5	1,355	6950283

See Notes on Page 48.

Outdoor Unit	Indoor Units		Cooling Ratings				CFM	AHRI #
	Coils/Air Handlers	Furnaces	Total[1]	Sens.[1]	SEER[2]	EER[3]		
ASX13 0421C* (Contd.)	CAPT4961*4A*	G*VM971005CNA*	41,000	31,400	14.0	11.5	1,300	7358865
	CAPT4961*4A*	A*VC81005C*B*	41,000	31,400	14.0	12.0	1,370	6950335
	CAPT4961*4A*	G*VC961005CNA*	41,000	31,400	14.0	11.5	1,300	7358862
	CAPT4961*4A*	A*VC961005CNA*	41,000	31,400	14.0	11.5	1,300	7358856
	CAPT4961*4A*+EEP		40,500	31,000	13.0	11.0	1,400	5611367
	CAPT4961*4A*+MBVC1600**-1A*		41,000	31,400	14.0	11.5	1,375	5611369
	CAPT4961*4A*+MBVC2000**-1A*		41,000	31,400	14.0	11.5	1,400	5611368
	CHPF3642C6C*	A*EH800805C*A*	40,000	30,600	13.0	11.3	1,350	6945838
	CHPF3642C6C*	G*E80805C*B*	40,000	30,600	13.0	11.3	1,350	6498434
	CHPF3642C6C*+EEP		38,500	30,600	13.0	11.0	1,075	6498435
	CHPF3642D6C*+EEP		40,000	30,600	13.0	11.0	1,400	6498442
	CHPF3743C6B*	G*VC960804CNA*	40,500	31,000	13.5	11.3	1,300	7358871
	CHPF3743C6B*	G*VC961205DNA*	40,000	30,600	13.5	11.3	1,250	7360608
	CHPF3743C6B*	G*VM971005CNA*	40,500	31,000	13.5	11.3	1,300	7358874
	CHPF3743C6B*	A*VC960804CNA*	40,500	31,000	13.5	11.3	1,300	7358867
	CHPF3743C6B*	G*VM971205DNA*	40,000	30,600	13.5	11.3	1,250	7360609
	CHPF3743C6B*	G*VM970804CNA*	40,500	31,000	13.5	11.3	1,300	7358873
	CHPF3743C6B*	A*VM971005CNA*	40,500	31,000	13.5	11.3	1,300	7358870
	CHPF3743C6B*	A*VC961205DNA*	40,000	30,600	13.5	11.3	1,250	7360606
	CHPF3743C6B*	A*VM970804CNA*	40,500	31,000	13.5	11.3	1,300	7358869
	CHPF3743C6B*	G*VC961005CNA*	40,500	31,000	13.5	11.3	1,300	7358872
	CHPF3743C6B*	A*VC961005CNA*	40,500	31,000	13.5	11.3	1,300	7358868
	CHPF3743C6B*	A*VM971205DNA*	40,000	30,600	13.5	11.3	1,250	7360607
	CHPF3743C6B*+EEP		39,000	30,600	13.0	11.0	1,075	5007382
	CHPF3743C6B*+TXV	A*VM971005CNA*	40,500	31,000	14.0	11.5	1,300	7358878
	CHPF3743C6B*+TXV	G*VC960804CNA*	40,500	31,000	14.0	11.5	1,300	7358879
	CHPF3743C6B*+TXV	A*VM970804CNA*	40,500	31,000	14.0	11.5	1,300	7358877
	CHPF3743C6B*+TXV	G*VM970804CNA*	40,500	31,000	14.0	11.5	1,300	7358881
	CHPF3743C6B*+TXV	A*VC961205DNA*	40,000	30,600	14.0	11.5	1,250	7360610
	CHPF3743C6B*+TXV	G*VM971005CNA*	40,500	31,000	14.0	11.5	1,300	7358882
	CHPF3743C6B*+TXV	G*VM971205DNA*	40,000	30,600	14.0	11.5	1,250	7360613
	CHPF3743C6B*+TXV	A*VM971205DNA*	40,000	30,600	14.0	11.5	1,250	7360611
	CHPF3743C6B*+TXV	A*VC961005CNA*	40,500	31,000	14.0	11.5	1,300	7358876
	CHPF3743C6B*+TXV	A*VC960804CNA*	40,500	31,000	14.0	11.5	1,300	7358875
	CHPF3743C6B*+TXV	G*VC961005CNA*	40,500	31,000	14.0	11.5	1,300	7358880
	CHPF3743C6B*+TXV	G*VC961205DNA*	40,000	30,600	14.0	11.5	1,250	7360612
	CHPF4860D6D*	A*VC960804CNA*	41,000	31,400	14.0	11.5	1,300	7358883
	CHPF4860D6D*	A*VC961005CNA*	41,000	31,400	14.0	11.5	1,300	7358884
	CHPF4860D6D*	G*VC961005CNA*	41,000	31,400	14.0	11.5	1,300	7358890
	CHPF4860D6D*	A*VM971005CNA*	41,000	31,400	14.0	11.5	1,300	7358887
	CHPF4860D6D*	A*EC961205DNA*	40,500	31,000	13.5	11.3	1,400	7366794
	CHPF4860D6D*	G*VC961205DNA*	40,500	31,000	14.0	11.5	1,250	7358891
	CHPF4860D6D*	A*VM970804CNA*	41,000	31,400	14.0	11.5	1,300	7358886
	CHPF4860D6D*	G*EC961004CNA*	39,500	30,200	14.0	11.5	1,275	7366686
	CHPF4860D6D*	A*VM971205DNA*	40,500	31,000	14.0	11.5	1,250	7358888
	CHPF4860D6D*	A*VC961205DNA*	40,500	31,000	14.0	11.5	1,250	7358885
	CHPF4860D6D*	G*VM970804CNA*	41,000	31,400	14.0	11.5	1,300	7358892
	CHPF4860D6D*	A*EC961004CNA*	39,500	30,200	14.0	11.5	1,275	7366789
	CHPF4860D6D*	G*VC960804CNA*	41,000	31,400	14.0	11.5	1,300	7358889
	CHPF4860D6D*	G*VM971005CNA*	41,000	31,400	14.0	11.5	1,300	7358893
	CHPF4860D6D*	G*VM971205DNA*	40,500	31,000	14.0	11.5	1,250	7358894
	CHPF4860D6D*	A*EH800805C*A*	41,000	31,400	13.5	11.5	1,510	6945839
	CHPF4860D6D*	G*EC961205DNA*	40,500	31,000	13.5	11.3	1,400	7366691

See Notes on Page 48.

Outdoor Unit	Indoor Units		Cooling Ratings				CFM	AHRI #
	Coils/Air Handlers	Furnaces	Total[1]	Sens.[1]	SEER[2]	EER[3]		
ASX13 0421C* (Contd.)	CHPF4860D6D*	G*E80805C*B*	41,000	31,400	13.5	11.5	1,400	6498443
	CHPF4860D6D*+EEP		41,000	31,400	13.0	11.0	1,400	6498452
	CHPF4860D6D*+MBVC1600**-1A*		41,000	31,400	14.0	11.5	1,400	3839190
	CHPF4860D6D*+TXV	A*EC961205DNA*	40,500	31,000	14.0	11.5	1,400	7366795
	CHPF4860D6D*+TXV	G*VM971005CNA*	41,000	31,400	14.0	11.5	1,300	7358905
	CHPF4860D6D*+TXV	A*EC961004CNA*	39,500	30,200	14.0	11.5	1,275	7366790
	CHPF4860D6D*+TXV	G*VC961205DNA*	40,500	31,000	14.0	11.5	1,250	7358903
	CHPF4860D6D*+TXV	G*VC960804CNA*	41,000	31,400	14.0	11.5	1,300	7358901
	CHPF4860D6D*+TXV	A*VM970804CNA*	41,000	31,400	14.0	11.5	1,300	7358898
	CHPF4860D6D*+TXV	A*VC960804CNA*	41,000	31,400	14.0	11.5	1,300	7358895
	CHPF4860D6D*+TXV	A*VM971005CNA*	41,000	31,400	14.0	11.5	1,300	7358899
	CHPF4860D6D*+TXV	G*VM971205DNA*	40,500	31,000	14.0	11.5	1,250	7358906
	CHPF4860D6D*+TXV	G*EC961004CNA*	39,500	30,200	14.0	11.5	1,275	7366687
	CHPF4860D6D*+TXV	G*EC961205DNA*	40,500	31,000	14.0	11.5	1,400	7366692
	CHPF4860D6D*+TXV	A*VC961205DNA*	40,500	31,000	14.0	11.5	1,250	7358897
	CHPF4860D6D*+TXV	A*VM971205DNA*	40,500	31,000	14.0	11.5	1,250	7358900
	CHPF4860D6D*+TXV	G*VM970804CNA*	41,000	31,400	14.0	11.5	1,300	7358904
	CHPF4860D6D*+TXV	G*VC961005CNA*	41,000	31,400	14.0	11.5	1,300	7358902
	CHPF4860D6D*+TXV	A*VC961005CNA*	41,000	31,400	14.0	11.5	1,300	7358896
	CSCF3642N6D*+EEP		40,000	30,600	13.0	11.0	1,325	5446183
	CSCF4860N6D*	A*VC960804CNA*	41,000	31,400	13.5	11.3	1,300	7358907
	CSCF4860N6D*	A*VM971005CNA*	41,000	31,400	13.5	11.5	1,300	7358911
	CSCF4860N6D*	A*VC961005CNA*	41,000	31,400	13.5	11.5	1,300	7358908
	CSCF4860N6D*	G*VC961205DNA*	40,500	31,000	13.5	11.3	1,250	7358915
	CSCF4860N6D*	G*VM970804CNA*	41,000	31,400	13.5	11.3	1,300	7358916
	CSCF4860N6D*	A*VC961205DNA*	40,500	31,000	13.5	11.3	1,250	7358909
	CSCF4860N6D*	G*VM971005CNA*	41,000	31,400	13.5	11.5	1,300	7358917
	CSCF4860N6D*	G*VM971205DNA*	40,500	31,000	13.5	11.3	1,250	7358918
	CSCF4860N6D*	G*VC960804CNA*	41,000	31,400	13.5	11.3	1,300	7358913
	CSCF4860N6D*	A*VM971205DNA*	40,500	31,000	13.5	11.3	1,250	7358912
	CSCF4860N6D*	A*VM970804CNA*	41,000	31,400	13.5	11.3	1,300	7358910
	CSCF4860N6D*	G*VC961005CNA*	41,000	31,400	13.5	11.5	1,300	7358914
	CSCF4860N6D*+EEP		41,000	31,400	13.0	11.0	1,325	5446184
	CSCF4860N6D*+TXV	G*VC961005CNA*	41,000	31,400	14.0	11.5	1,300	7358926
	CSCF4860N6D*+TXV	G*VM970804CNA*	41,000	31,400	14.0	11.5	1,300	7358928
	CSCF4860N6D*+TXV	A*VM970804CNA*	41,000	31,400	14.0	11.5	1,300	7358922
	CSCF4860N6D*+TXV	G*VC960804CNA*	41,000	31,400	14.0	11.5	1,300	7358925
	CSCF4860N6D*+TXV	A*VC960804CNA*	41,000	31,400	14.0	11.5	1,300	7358919
	CSCF4860N6D*+TXV	G*VM971205DNA*	40,500	31,000	14.0	11.5	1,250	7358930
	CSCF4860N6D*+TXV	A*VC961205DNA*	40,500	31,000	14.0	11.5	1,250	7358921
	CSCF4860N6D*+TXV	G*VC961205DNA*	40,500	31,000	14.0	11.5	1,250	7358927
	CSCF4860N6D*+TXV	A*VM971005CNA*	41,000	31,400	14.0	11.5	1,300	7358923
	CSCF4860N6D*+TXV	G*VM971005CNA*	41,000	31,400	14.0	11.5	1,300	7358929
	CSCF4860N6D*+TXV	A*VM971205DNA*	40,500	31,000	14.0	11.5	1,250	7358924
	CSCF4860N6D*+TXV	A*VC961005CNA*	41,000	31,400	14.0	11.5	1,300	7358920
ASX13 0481C*	ARUF47D14A*		45,000	34,600	13.0	11.0	1,515	7988985
	ARUF48D14A*+TXV		44,500	34,200	13.0	11.0	1,550	5501067
	ARUF49D14A*		45,000	34,600	13.0	11.0	1,455	8171742
	ARUF60D14A*+TXV		44,500	34,200	13.0	11.0	1,460	6498455
	ASPT49C14A*		44,000	33,800	13.0	11.0	1,395	10221026
	ASPT49D14A*		45,000	34,600	14.0	11.5	1,430	8245610
	AVPTC48C14A*		44,000	33,800	13.0	11.0	1,450	7080478
	AVPTC48D14A*		46,000	35,400	13.8	11.3	1,615	5924467

See Notes on Page 48.

Outdoor Unit	Indoor Units		Cooling Ratings				CFM	AHRI #
	Coils/Air Handlers	Furnaces	Total[1]	Sens.[1]	SEER[2]	EER[3]		
ASX13 0481C* (Contd.)	AVPTC49C14A*		44,000	33,800	13.0	11.0	1,420	10221067
	AVPTC59C14A*		45,000	34,600	13.0	11.0	1,485	8996349
	AVPTC59D14A*		45,500	35,000	14.0	12.0	1,580	9000369
	AVPTC61D14A*		46,000	35,400	14.0	12.0	1,455	9000370
	CA*F4860*6D*+EEP		46,000	35,400	13.0	11.0	1,600	4919372
	CA*F4860*6D*+MBVC2000**-1A*		46,000	35,400	14.0	11.3	1,600	6498456
	CA*F4860*6D*+TXV	G*EC961004CNA*	46,000	35,400	14.0	11.5	1,550	7366693
	CA*F4860*6D*+TXV	A*EH800805C*A*	46,000	35,400	13.5	11.3	1,650	6945843
	CA*F4860*6D*+TXV	A*EH801005C*A*	46,000	35,400	13.5	11.3	1,570	6945844
	CA*F4860*6D*+TXV	A*EC961004CNA*	46,000	35,400	14.0	11.5	1,550	7366796
	CA*F4860*6D*+TXV	G*E81005C*B*	46,000	35,400	13.5	11.3	1,570	6498458
	CA*F4860*6D*+TXV	G*E80805C*B*	46,000	35,400	13.5	11.3	1,650	6498457
	CA*F4961*6D*	G*EC961205DNA*	45,500	35,000	14.0	11.5	1,525	7366698
	CA*F4961*6D*	A*EC961205DNA*	45,500	35,000	14.0	11.5	1,525	7366801
	CA*F4961*6D*+EEP		46,000	35,400	13.0	11.0	1,600	6498468
	CA*F4961*6D*+TXV	A*VM971205DNA*	46,000	35,400	14.0	11.5	1,575	7358936
	CA*F4961*6D*+TXV	G*EC961205DNA*	46,000	35,400	14.0	11.5	1,525	7366699
	CA*F4961*6D*+TXV	A*EC961004CNA*	46,000	35,400	14.0	11.5	1,550	7366797
	CA*F4961*6D*+TXV	A*EC961205DNA*	46,000	35,400	14.0	11.5	1,525	7366802
	CA*F4961*6D*+TXV	A*VM970804CNA*	45,000	34,600	14.0	11.5	1,585	7358934
	CA*F4961*6D*+TXV	A*VM971005CNA*	45,000	34,600	14.0	11.5	1,520	7358935
	CA*F4961*6D*+TXV	G*VC961205DNA*	46,000	35,400	14.0	11.5	1,575	7358939
	CA*F4961*6D*+TXV	G*VC960804CNA*	45,000	34,600	14.0	11.5	1,585	7358937
	CA*F4961*6D*+TXV	G*VM971005CNA*	45,000	34,600	14.0	11.5	1,520	7358941
	CA*F4961*6D*+TXV	A*VC961205DNA*	46,000	35,400	14.0	11.5	1,575	7358933
	CA*F4961*6D*+TXV	G*EC961004CNA*	46,000	35,400	14.0	11.5	1,550	7366694
	CA*F4961*6D*+TXV	G*VC961005CNA*	45,000	34,600	14.0	11.5	1,520	7358938
	CA*F4961*6D*+TXV	G*VM971205DNA*	46,000	35,400	14.0	11.5	1,575	7358942
	CA*F4961*6D*+TXV	G*VM970804CNA*	45,000	34,600	14.0	11.5	1,585	7358940
	CA*F4961*6D*+TXV	A*VC960804CNA*	45,000	34,600	14.0	11.5	1,585	7358931
	CA*F4961*6D*+TXV	A*VC961005CNA*	45,000	34,600	14.0	11.5	1,520	7358932
	CAPT4961*4A*	A*VM971205DNA*	46,000	35,400	14.0	11.5	1,575	7358948
	CAPT4961*4A*	A*EC961004CNA*	46,000	35,400	14.0	11.5	1,550	7366798
	CAPT4961*4A*	ADVC81005C*B*	47,000	36,200	13.5	11.5	1,620	6950615
	CAPT4961*4A*	G*VM970804CNA*	45,000	34,600	13.5	11.3	1,585	7358952
	CAPT4961*4A*	A*VC80604B*B*	47,000	36,200	13.5	11.5	1,545	6950312
	CAPT4961*4A*	A*VC960804CNA*	45,000	34,600	13.5	11.3	1,585	7358943
	CAPT4961*4A*	A*EC961205DNA*	46,000	35,400	13.5	11.3	1,525	7366803
	CAPT4961*4A*	G*VM971005CNA*	45,000	34,600	14.0	11.5	1,520	7358953
	CAPT4961*4A*	ADVC80805C*B*	47,000	36,200	13.5	11.5	1,585	6950606
	CAPT4961*4A*	G*VC960804CNA*	45,000	34,600	13.5	11.3	1,585	7358949
	CAPT4961*4A*	G*EC961205DNA*	46,000	35,400	13.5	11.3	1,525	7366700
	CAPT4961*4A*	A*VM970804CNA*	45,000	34,600	13.5	11.3	1,585	7358946
	CAPT4961*4A*	A*VC961205DNA*	46,000	35,400	14.0	11.5	1,575	7358945
	CAPT4961*4A*	A*VC961005CNA*	45,000	34,600	14.0	11.5	1,520	7358944
	CAPT4961*4A*	G*E81005C*B*	47,000	36,200	13.5	11.5	1,570	6950300
	CAPT4961*4A*	G*E80805C*B*	46,000	35,400	13.5	11.5	1,480	6950286
	CAPT4961*4A*	G*VC961205DNA*	46,000	35,400	14.0	11.5	1,575	7358951
	CAPT4961*4A*	G*VC961005CNA*	45,000	34,600	14.0	11.5	1,520	7358950
	CAPT4961*4A*	A*VC80805C*B*	47,000	36,200	13.5	11.5	1,590	6950326
	CAPT4961*4A*	G*VM971205DNA*	46,000	35,400	14.0	11.5	1,575	7358954
	CAPT4961*4A*	G*EC961004CNA*	46,000	35,400	14.0	11.5	1,550	7366695
	CAPT4961*4A*	A*VC81005C*B*	47,000	36,200	13.5	11.5	1,600	6950337

See Notes on Page 48.

Outdoor Unit	Indoor Units		Cooling Ratings				CFM	AHRI #
	Coils/Air Handlers	Furnaces	Total[1]	Sens.[1]	SEER[2]	EER[3]		
ASX13 0481C* (Contd.)	CAPT4961*4A*	A*VM971005CNA*	45,000	34,600	14.0	11.5	1,520	7358947
	CAPT4961*4A*+EEP		46,500	35,800	13.0	11.0	1,600	5611370
	CAPT4961*4A*+MBVC1600**-1A*		47,000	36,200	14.0	11.5	1,500	5611371
	CAPT4961*4A*+MBVC2000**-1A*		47,000	36,200	14.0	11.5	1,550	5611372
	CHPF4860D6D*	A*EC961004CNA*	45,500	35,000	13.5	11.5	1,550	7366799
	CHPF4860D6D*	A*EC961205DNA*	45,500	35,000	13.5	11.3	1,525	7366804
	CHPF4860D6D*	G*EC961004CNA*	45,500	35,000	13.5	11.5	1,550	7366696
	CHPF4860D6D*	G*EC961205DNA*	45,500	35,000	13.5	11.3	1,525	7366701
	CHPF4860D6D*+EEP		46,000	35,400	13.0	11.0	1,600	3839212
	CHPF4860D6D*+MBVC2000**-1A*		46,000	35,400	14.0	11.3	1,600	3839214
	CHPF4860D6D*+TXV	G*VC960804CNA*	45,000	34,600	14.0	11.5	1,585	7358961
	CHPF4860D6D*+TXV	A*EC961004CNA*	45,500	35,000	14.0	11.5	1,550	7366800
	CHPF4860D6D*+TXV	A*VC960804CNA*	45,000	34,600	14.0	11.5	1,585	7358955
	CHPF4860D6D*+TXV	G*VC961205DNA*	46,000	35,400	14.0	11.5	1,575	7358963
	CHPF4860D6D*+TXV	G*E81005C*B*	46,000	35,400	13.5	11.3	1,570	6498470
	CHPF4860D6D*+TXV	G*VM970804CNA*	45,000	34,600	14.0	11.5	1,585	7358964
	CHPF4860D6D*+TXV	G*VM971005CNA*	45,000	34,600	14.0	11.5	1,520	7358965
	CHPF4860D6D*+TXV	G*EC961205DNA*	45,500	35,000	14.0	11.5	1,525	7366702
	CHPF4860D6D*+TXV	G*EC961004CNA*	45,500	35,000	14.0	11.5	1,550	7366697
	CHPF4860D6D*+TXV	G*VM971205DNA*	46,000	35,400	14.0	11.5	1,575	7358966
	CHPF4860D6D*+TXV	G*E80805C*B*	46,000	35,400	13.5	11.3	1,650	6498469
	CHPF4860D6D*+TXV	A*VC961205DNA*	46,000	35,400	14.0	11.5	1,575	7358957
	CHPF4860D6D*+TXV	A*VM971205DNA*	46,000	35,400	14.0	11.5	1,575	7358960
	CHPF4860D6D*+TXV	A*VC961005CNA*	45,000	34,600	14.0	11.5	1,520	7358956
	CHPF4860D6D*+TXV	G*VC961005CNA*	45,000	34,600	14.0	11.5	1,520	7358962
	CHPF4860D6D*+TXV	A*EH800805C*A*	46,000	35,400	13.5	11.3	1,650	6945847
	CHPF4860D6D*+TXV	A*VM971005CNA*	45,000	34,600	14.0	11.5	1,520	7358959
	CHPF4860D6D*+TXV	A*EC961205DNA*	45,500	35,000	14.0	11.5	1,525	7366805
	CHPF4860D6D*+TXV	A*VM970804CNA*	45,000	34,600	14.0	11.5	1,585	7358958
	CHPF4860D6D*+TXV	A*EH801005C*A*	46,000	35,400	13.5	11.3	1,570	6945848
	CSCF4860N6D*+EEP		46,000	35,400	13.0	11.0	1,600	4767343
	CSCF4860N6D*+TXV	G*VC960804CNA*	44,500	34,200	13.5	11.3	1,585	7358973
	CSCF4860N6D*+TXV	G*VM971205DNA*	45,500	35,000	14.0	11.5	1,575	7358978
	CSCF4860N6D*+TXV	A*VC961005CNA*	44,500	34,200	14.0	11.5	1,520	7358968
	CSCF4860N6D*+TXV	G*VM971005CNA*	44,500	34,200	14.0	11.5	1,520	7358977
	CSCF4860N6D*+TXV	A*VM970804CNA*	44,500	34,200	13.5	11.3	1,585	7358970
	CSCF4860N6D*+TXV	A*VM971005CNA*	44,500	34,200	14.0	11.5	1,520	7358971
	CSCF4860N6D*+TXV	A*VC960804CNA*	44,500	34,200	13.5	11.3	1,585	7358967
	CSCF4860N6D*+TXV	G*VC961205DNA*	45,500	35,000	14.0	11.5	1,575	7358975
	CSCF4860N6D*+TXV	G*VC961005CNA*	44,500	34,200	14.0	11.5	1,520	7358974
	CSCF4860N6D*+TXV	G*VM970804CNA*	44,500	34,200	13.5	11.3	1,585	7358976
	CSCF4860N6D*+TXV	A*VC961205DNA*	45,500	35,000	14.0	11.5	1,575	7358969
	CSCF4860N6D*+TXV	A*VM971205DNA*	45,500	35,000	14.0	11.5	1,575	7358972
ASX13 0611A*	ARUF61D14A*		55,500	39,500	13.0	11.0	1,520	7988986
	ASPT61D14A*		56,000	40,000	14.0	11.5	1,645	8245612
	AVPTC59D14A*		56,000	40,000	13.5	11.5	1,660	8996350
	AVPTC60D14A*		56,000	40,000	14.0	11.5	1,620	5924373
	AVPTC61D14A*		57,000	40,500	14.0	11.5	1,775	8996351
	CA*F4860*6D*+EEP		55,000	39,000	13.0	11.0	1,500	5586905
	CA*F4860*6D*+MBVC2000**-1A*		56,000	40,000	13.5	11.5	1,575	5586906
	CA*F4860*6D*+MBVC2000**-1A*+TXV		56,000	40,000	14.0	11.5	1,575	5586907
	CA*F4860*6D*+TXV	G*VC81005C*B*	55,500	39,500	13.5	11.0	1,520	5586915
	CA*F4860*6D*+TXV	A*VC81005C*B*	55,500	39,500	13.5	11.0	1,520	5586908

See Notes on Page 48.

Outdoor Unit	Indoor Units		Cooling Ratings				CFM	AHRI #
	Coils/Air Handlers	Furnaces	Total[1]	Sens.[1]	SEER[2]	EER[3]		
ASX13 0611A* (Contd.)	CA*F4860*6D*+TXV	G*E80805C*B*	55,500	39,500	13.0	11.0	1,550	5586914
	CA*F4860*6D*+TXV	A*EH801005C*A*	55,000	39,000	13.5	11.0	1,525	6945852
	CA*F4860*6D*+TXV	G*VC80805C*B*	55,500	39,500	13.5	11.0	1,520	5586952
	CA*F4860*6D*+TXV	A*EH800805C*A*	55,500	39,500	13.0	11.0	1,550	6945851
	CA*F4860*6D*+TXV	G*E81005C*B*	55,000	39,000	13.5	11.0	1,525	5586951
	CA*F4860*6D*+TXV	ADVC81005C*B*	55,500	39,500	13.0	11.0	1,550	5586950
	CA*F4860*6D*+TXV	A*VC80805C*B*	55,500	39,500	13.5	11.0	1,520	5586947
	CA*F4860*6D*+TXV	ADVC80805C*B*	55,500	39,500	13.0	11.0	1,500	5586913
	CA*F4961*6D*+EEP		56,500	40,000	13.0	11.0	1,500	5586921
	CA*F4961*6D*+MBVC2000**-1A*		57,000	40,500	14.0	11.5	1,575	5586955
	CA*F4961*6D*+MBVC2000**-1A*+TXV		57,000	40,500	14.0	12.0	1,575	5586922
	CA*F4961*6D*+TXV	A*VC80805C*B*	56,500	40,000	14.0	11.5	1,520	5586923
	CA*F4961*6D*+TXV	G*VC81005C*B*	56,500	40,000	14.0	11.5	1,520	5586932
	CA*F4961*6D*+TXV	A*EH801005C*A*	56,000	40,000	14.0	11.5	1,525	6945856
	CA*F4961*6D*+TXV	A*EC961205DNA*	56,000	40,000	14.0	11.5	1,525	7366806
	CA*F4961*6D*+TXV	A*VC81005C*B*	56,500	40,000	14.0	11.5	1,520	5586924
	CA*F4961*6D*+TXV	A*VM971005CNA*	56,000	40,000	13.5	11.5	1,520	7358981
	CA*F4961*6D*+TXV	G*VM971205DNA*	56,000	40,000	14.0	11.5	1,545	7358986
	CA*F4961*6D*+TXV	G*VM971005CNA*	56,000	40,000	13.5	11.5	1,520	7358985
	CA*F4961*6D*+TXV	G*VC80805C*B*	56,500	40,000	14.0	11.5	1,520	5586931
	CA*F4961*6D*+TXV	G*VC961005CNA*	56,000	40,000	13.5	11.5	1,520	7358983
	CA*F4961*6D*+TXV	ADVC81005C*B*	57,000	40,500	13.5	11.0	1,550	5586928
	CA*F4961*6D*+TXV	G*E81005C*B*	56,000	40,000	14.0	11.5	1,525	5586930
	CA*F4961*6D*+TXV	A*VM971205DNA*	56,000	40,000	14.0	11.5	1,545	7358982
	CA*F4961*6D*+TXV	A*VC961005CNA*	56,000	40,000	13.5	11.5	1,520	7358979
	CA*F4961*6D*+TXV	G*VC961205DNA*	56,000	40,000	14.0	11.5	1,545	7358984
	CA*F4961*6D*+TXV	A*VC961205DNA*	56,000	40,000	14.0	11.5	1,545	7358980
	CA*F4961*6D*+TXV	A*EH800805C*A*	56,000	40,000	14.0	11.5	1,550	6945855
	CA*F4961*6D*+TXV	G*E80805C*B*	56,000	40,000	14.0	11.5	1,550	5586929
	CA*F4961*6D*+TXV	G*EC961205DNA*	56,000	40,000	14.0	11.5	1,525	7366703
	CA*F4961*6D*+TXV	ADVC80805C*B*	57,000	40,500	13.5	11.0	1,500	5586927
	CAPT4961*4A*	A*EC961205DNA*	56,000	40,000	13.5	11.5	1,525	7366807
	CAPT4961*4A*	G*VC81005C*B*	56,500	40,000	14.0	11.5	1,520	5587001
	CAPT4961*4A*	A*VM971205DNA*	56,000	40,000	13.5	11.5	1,545	7358990
	CAPT4961*4A*	G*VM971205DNA*	56,000	40,000	13.5	11.5	1,545	7358994
	CAPT4961*4A*	ADVC81005C*B*	57,000	40,500	13.5	11.0	1,550	5586997
	CAPT4961*4A*	G*VC961205DNA*	56,000	40,000	13.5	11.5	1,545	7358992
	CAPT4961*4A*	G*VM971005CNA*	56,000	40,000	13.5	11.0	1,520	7358993
	CAPT4961*4A*	G*E81005C*B*	56,000	40,000	14.0	11.5	1,525	5586999
	CAPT4961*4A*	G*E80805C*B*	56,000	40,000	14.0	11.5	1,550	5586998
	CAPT4961*4A*	A*VM971005CNA*	56,000	40,000	13.5	11.0	1,520	7358989
	CAPT4961*4A*	A*VC961005CNA*	56,000	40,000	13.5	11.0	1,520	7358987
	CAPT4961*4A*	G*VC961005CNA*	56,000	40,000	13.5	11.0	1,520	7358991
	CAPT4961*4A*	A*VC81005C*B*	56,500	40,000	14.0	11.5	1,520	5586993
	CAPT4961*4A*	A*EH801005C*A*	56,000	40,000	14.0	11.5	1,525	6945860
	CAPT4961*4A*	G*EC961205DNA*	56,000	40,000	13.5	11.5	1,525	7366704
	CAPT4961*4A*	A*EH800805C*A*	56,000	40,000	14.0	11.5	1,550	6945859
	CAPT4961*4A*	G*VC80805C*B*	56,500	40,000	14.0	11.5	1,520	5587000
	CAPT4961*4A*	A*VC80805C*B*	56,500	40,000	14.0	11.5	1,520	5586992
	CAPT4961*4A*	ADVC80805C*B*	57,000	40,500	13.5	11.0	1,500	5586996
	CAPT4961*4A*	A*VC961205DNA*	56,000	40,000	13.5	11.5	1,545	7358988
	CAPT4961*4A*+EEP		56,500	40,000	13.5	11.0	1,500	5586970
	CAPT4961*4A*+MBVC1600**-1A*		57,000	40,500	13.5	11.5	1,560	6950280

See Notes on Page 48.

Outdoor Unit	Indoor Units		Cooling Ratings				CFM	AHRI #
	Coils/Air Handlers	Furnaces	Total[1]	Sens.[1]	SEER[2]	EER[3]		
ASX13 0611A* (Contd.)	CAPT4961*4A*+MBVC2000**-1A*		57,000	40,500	14.0	12.0	1,575	5586971
	CHPF4860D6D*+EEP		56,000	40,000	13.0	11.0	1,500	5586937
	CHPF4860D6D*+MBVC2000**-1A*		57,000	40,500	14.0	11.5	1,575	5586972
	CHPF4860D6D*+MBVC2000**-1A*+TXV		57,000	40,500	14.0	11.5	1,575	5586973
	CHPF4860D6D*+TXV	G*E80805C*B*	56,000	40,000	14.0	11.5	1,550	5586982
	CHPF4860D6D*+TXV	A*VC961005CNA*	56,000	40,000	13.5	11.0	1,520	7358995
	CHPF4860D6D*+TXV	G*E81005C*B*	56,000	40,000	14.0	11.5	1,525	5586983
	CHPF4860D6D*+TXV	A*VM971205DNA*	56,000	40,000	14.0	11.5	1,545	7358998
	CHPF4860D6D*+TXV	G*VM971205DNA*	56,000	40,000	14.0	11.5	1,545	7359002
	CHPF4860D6D*+TXV	A*VC80805C*B*	56,000	40,000	14.0	11.5	1,520	5586974
	CHPF4860D6D*+TXV	A*VC81005C*B*	56,500	40,000	14.0	11.5	1,520	5586975
	CHPF4860D6D*+TXV	A*EH801005C*A*	56,000	40,000	14.0	11.5	1,525	6945864
	CHPF4860D6D*+TXV	A*VM971005CNA*	56,000	40,000	13.5	11.0	1,520	7358997
	CHPF4860D6D*+TXV	A*EH800805C*A*	56,000	40,000	14.0	11.5	1,550	6945863
	CHPF4860D6D*+TXV	A*VC961205DNA*	56,000	40,000	14.0	11.5	1,545	7358996
	CHPF4860D6D*+TXV	G*VC961005CNA*	56,000	40,000	13.5	11.0	1,520	7358999
	CHPF4860D6D*+TXV	G*EC961205DNA*	56,000	40,000	14.0	11.5	1,525	7366705
	CHPF4860D6D*+TXV	G*VM971005CNA*	56,000	40,000	13.5	11.0	1,520	7359001
	CHPF4860D6D*+TXV	G*VC961205DNA*	56,000	40,000	14.0	11.5	1,545	7359000
	CHPF4860D6D*+TXV	G*VC80805C*B*	56,000	40,000	14.0	11.5	1,520	5586984
	CHPF4860D6D*+TXV	G*VC81005C*B*	56,500	40,000	14.0	11.5	1,520	5586985
	CHPF4860D6D*+TXV	A*EC961205DNA*	56,000	40,000	14.0	11.5	1,525	7366808
	CSCF4860N6D*+EEP		55,000	39,000	13.0	11.0	1,500	5589972
	CSCF4860N6D*+MBVC2000**-1A*		56,000	40,000	13.5	11.5	1,575	5589973
	CSCF4860N6D*+MBVC2000**-1A*+TXV		56,000	40,000	14.0	11.5	1,575	5586942
	CSCF4860N6D*+TXV	A*VC81005C*B*	55,500	39,500	13.5	11.0	1,520	5589975
	CSCF4860N6D*+TXV	A*VC961205DNA*	55,500	39,500	13.5	11.0	1,545	7359004
	CSCF4860N6D*+TXV	G*VC961205DNA*	55,500	39,500	13.5	11.0	1,545	7359008
	CSCF4860N6D*+TXV	G*VM971205DNA*	55,500	39,500	13.5	11.0	1,545	7359010
	CSCF4860N6D*+TXV	A*VM971005CNA*	55,500	39,500	13.5	11.0	1,520	7359005
	CSCF4860N6D*+TXV	G*VM971005CNA*	55,500	39,500	13.5	11.0	1,520	7359009
	CSCF4860N6D*+TXV	G*VC961005CNA*	55,500	39,500	13.5	11.0	1,520	7359007
	CSCF4860N6D*+TXV	G*VC80805C*B*	56,500	40,000	13.5	11.5	1,520	5589983
	CSCF4860N6D*+TXV	A*EH801005C*A*	55,500	39,500	13.5	11.0	1,525	6945868
	CSCF4860N6D*+TXV	A*VC961005CNA*	55,500	39,500	13.5	11.0	1,520	7359003
	CSCF4860N6D*+TXV	G*E81005C*B*	55,500	39,500	13.5	11.0	1,525	5589982
	CSCF4860N6D*+TXV	A*EH800805C*A*	54,500	38,500	13.0	11.0	1,550	6945867
	CSCF4860N6D*+TXV	A*VC80805C*B*	56,500	40,000	13.5	11.5	1,520	5589974
	CSCF4860N6D*+TXV	G*VC81005C*B*	55,500	39,500	13.5	11.0	1,520	5589984
	CSCF4860N6D*+TXV	G*E80805C*B*	54,500	38,500	13.0	11.0	1,550	5586991
	CSCF4860N6D*+TXV	A*VM971205DNA*	55,500	39,500	13.5	11.0	1,545	7359006

[1] BTU/h

[2] Seasonal Energy Efficiency Ratio; Certified per AHRI 210/240 @ 80°F/ 67°F/ 95°F

[3] Energy Efficiency Ratio @ 80°F/ 67°F/ 95°F

Notes

- Always check the S&R plate for electrical data on the unit being installed.
- When matching the outdoor unit to the indoor unit, use the piston supplied with the outdoor unit or that specified on the piston kit chart supplied with the indoor unit.
- EEP - Order from Service Dept. Part No. B13707-38 or new Solid State Board B13707-35S. Part No. B13707-38 is not interchangeable with B13707-35S. The Amana brand gas furnace contains the EEP cooling time delay.
- HSK - Hard Start Kit: This is an additional capacitor to assist with compressor start-up, used with the standard "run" capacitor that is supplied in the unit. Order from an Amana® brand distributor or service department.

ECN	REV	ZONE	DESCRIPTION	CHK	DR	DATE
XXXXXXX	A	XXXXX	INITIAL RELEASE	-		

MODEL	DIMENSIONS		
	W"	D"	H"
ASX130181**	26"	26"	27½
ASX130241**	26"	26"	27½
ASX130301**	26"	26"	27½
ASX130361C*	29"	29"	28¾
ASX130361D*	26"	26"	27½
ASX130421**	29"	29"	36¼
ASX130481**	29"	29"	36¼
ASX130601**	29	29	40
ASX130611**	35½	35½	38¾

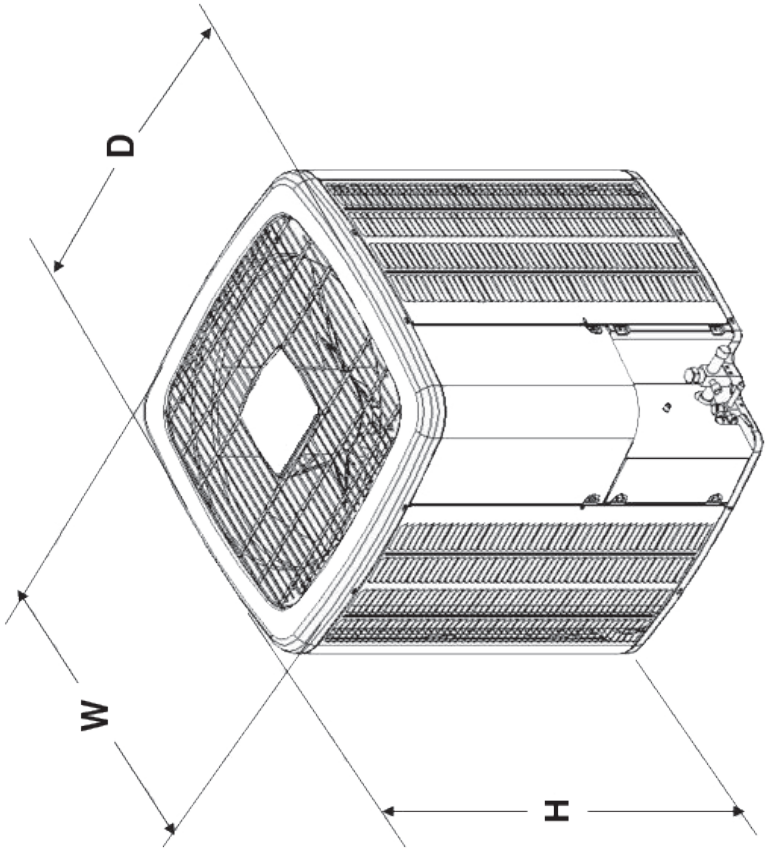

Goodman Manufacturing Company, L.P.

DRAWING TO BE INTERPRETED IN ACCORDANCE WITH ASME Y14.100

DIMENSIONS ARE IN INCHES UNLESS OTHERWISE NOTED

TOLERANCES
ANGLES ± 1.5°
.X ± .1
.XX ± .03
.XXX ± .015
HOLE Ø ± .005
TUBE CUT (L) ± .063

DWN BY: GL
CHK BY:
ENG
DATE

DO NOT SCALE DRAWING
SHT 1 OF 1
REV A

COMPONENTS AND MATERIALS SPECIFIED HEREIN WILL ALSO CONFORM TO THE APPLICABLE SECTION OF GOODMAN MSP 8240 WORKMANSHIP STANDARD FOR FIT, FEEL AND FINISH

CONFIDENTIAL PROPERTY OF THE GOODMAN MANUFACTURING COMPANY, LP. NOT TO BE DISCLOSED TO OTHERS, COPIED, OR USED FOR ANY PURPOSE EXCEPT AS AUTHORIZED IN WRITING. MUST BE RETURNED UPON DEMAND, ON COMPLETION OF ORDER, OR OTHER PURPOSE FOR WHICH IT WAS LENT.

SPECIAL CHARACTERISTICS

= 6SIGMA

= CRITICAL CHARACTERISTIC

= SIGNIFICANT CHARACTERISTIC

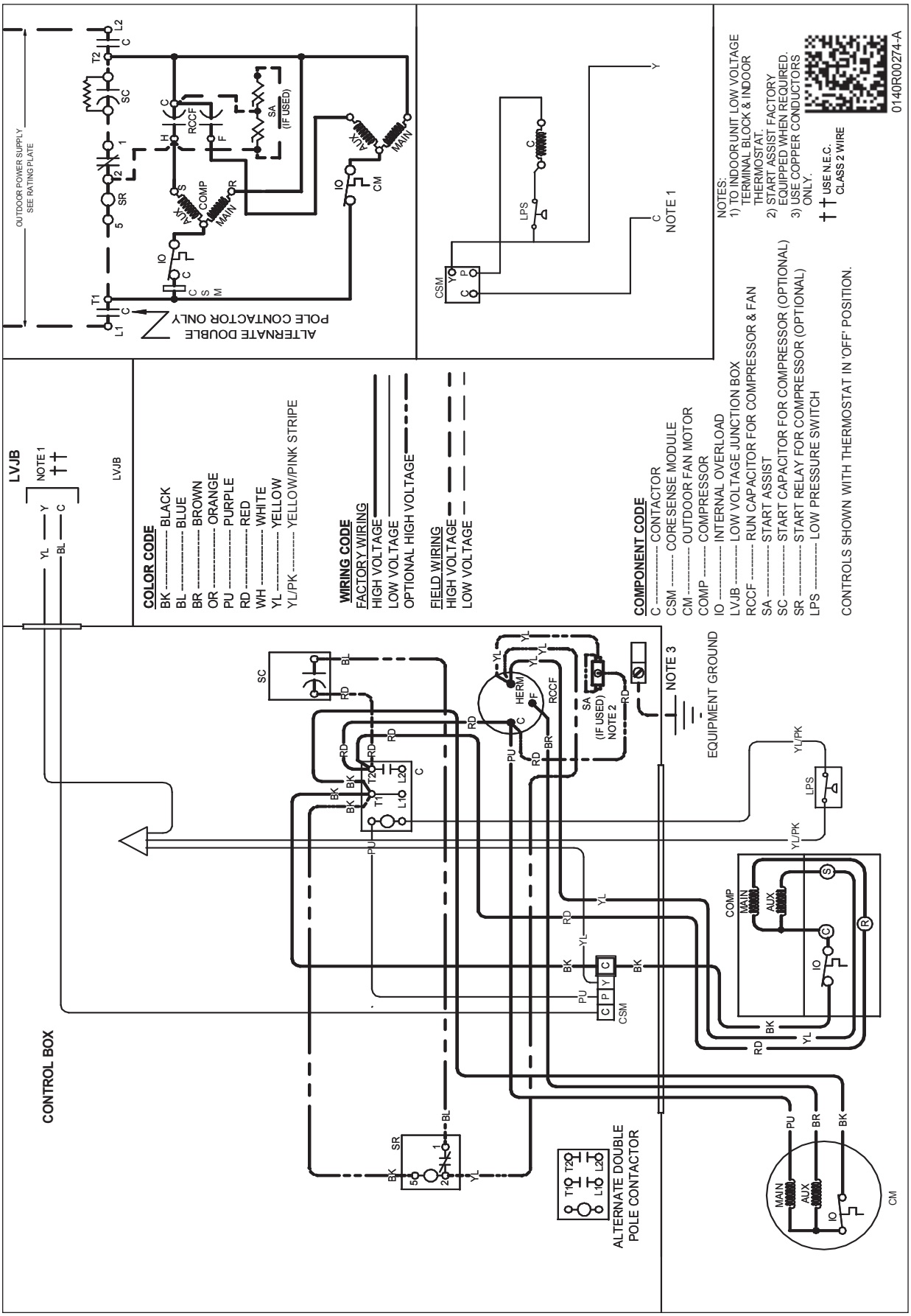

WARNING

High Voltage: Disconnect all power before servicing or installing this unit. Multiple power sources may be present. Failure to do so may cause property damage, personal injury, or death.

Wiring is subject to change. Always refer to the wiring diagram or the unit for the most up-to-date wiring.

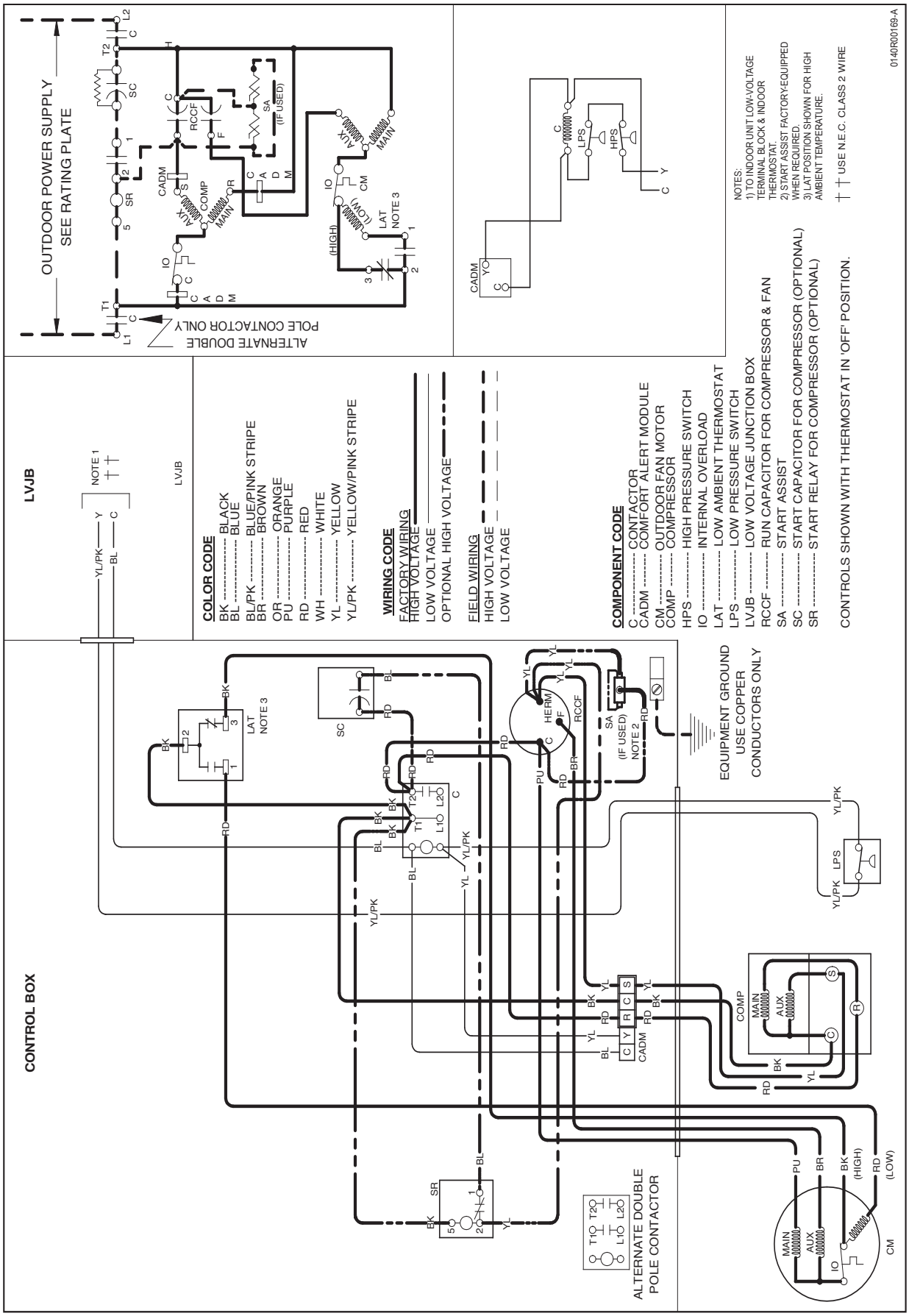

WARNING

High Voltage: Disconnect all power before servicing or installing this unit. Multiple power sources may be present. Failure to do so may cause property damage, personal injury, or death.

Wiring is subject to change. Always refer to the wiring diagram or the unit for the most up-to-date wiring.

Model	Description	ASX13 018*	ASX13 024*	ASX13 030*	ASX13 036*	ASX13 042*	ASX13 048*	ASX13 060*
ABK-20	Anchor Bracket Kit◊	X	X	X	X	X	X	X
ASC-01	Anti-Short Cycle Kit	X	X	X	X	X	X	X
CSR-U-1	Hard-start Kit	X	X	X	X	X	X	X
FSK01A[1]	Freeze Protection Kit	X	X	X	X	X	X	X
LAKT01A	Low-Ambient Kit	X	X	X	X	X	X	X
LSK01A	Liquid Line Solenoid Kit	X	X	X	X	X	X	X
OT18-60A	Outdoor Thermostat	X	X	X	X	X	X	X
TX2N4[2]	TXV Kit	X						
TX2N4A[2]	TXV Kit	X	X					
TX3N4[2]	TXV Kit			X	X			
TX5N4[2]	TXV Kit					X	X	X

◊ Contains 20 brackets; four brackets needed to anchor unit to pad

1 Installed on indoor coil

2 Field-installed, non-bleed, expansion valve kit — Condensing units and heat pumps with reciprocating compressors require the use of start-assist components when used in conjunction with an indoor coil using a non-bleed thermal expansion valve refrigerant metering device or liquid line solenoid kit. The TXV should always be sized based on the tonnage of the outdoor unit.

Amana® is a trademark of Maytag Corporation or its related companies and used under license to Goodman Company, L.P. All rights reserved. Our continuing commitment to quality products may mean a change in specifications without notice. ©2018 Goodman Company, L.P. • Houston, Texas • Printed in the USA.